STREET WORKOUT 14

KS-SW-032



Inter-Play
PHONE: +48 91 506 50 41, EXPORT@INTER-PLAY.EU, WWW.INTER-PLAY.EU

v.1-04.06.2025

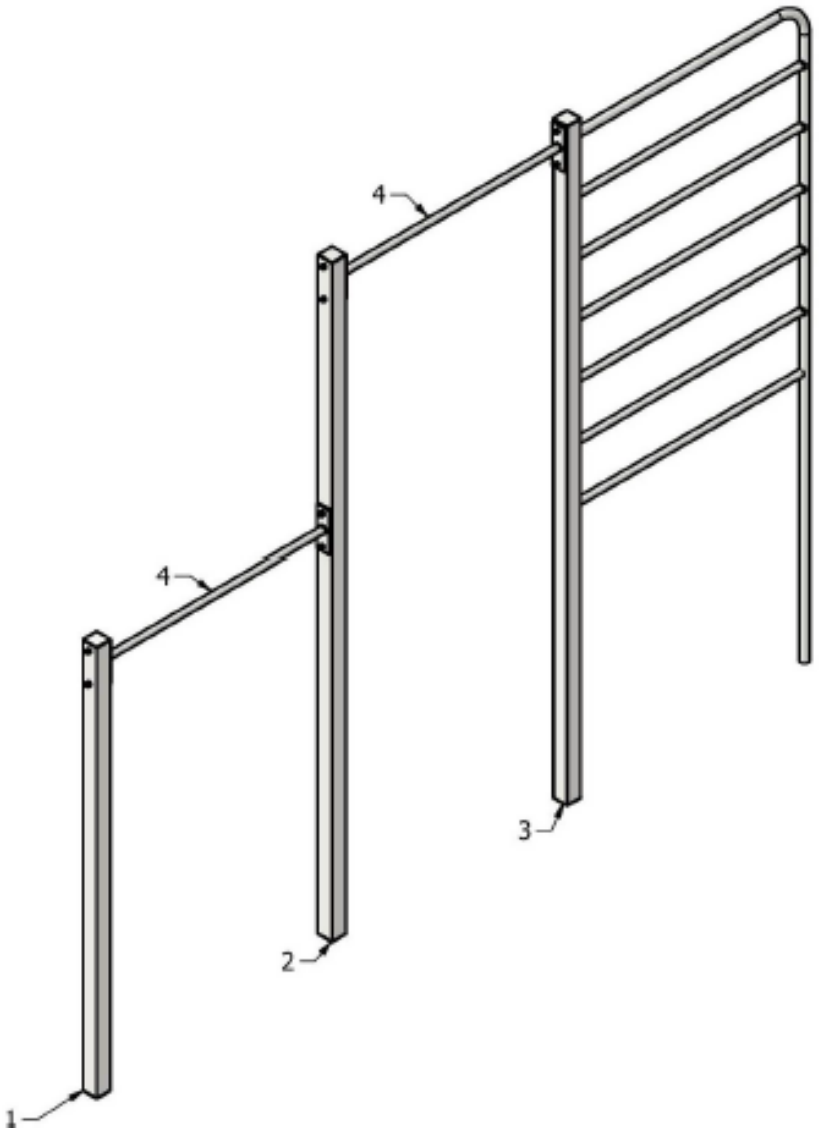
4
4
3
2
1

ELEMENTS	
	
1. H=2200 x 1	2. H= 3300 x 1
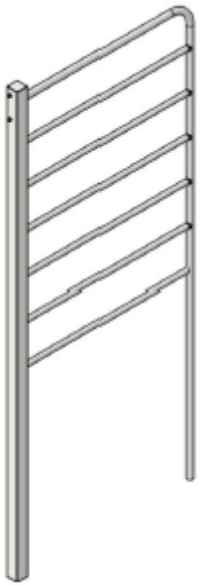	
3. H=3300 x 1	4. L=1240 x 2

Heighs

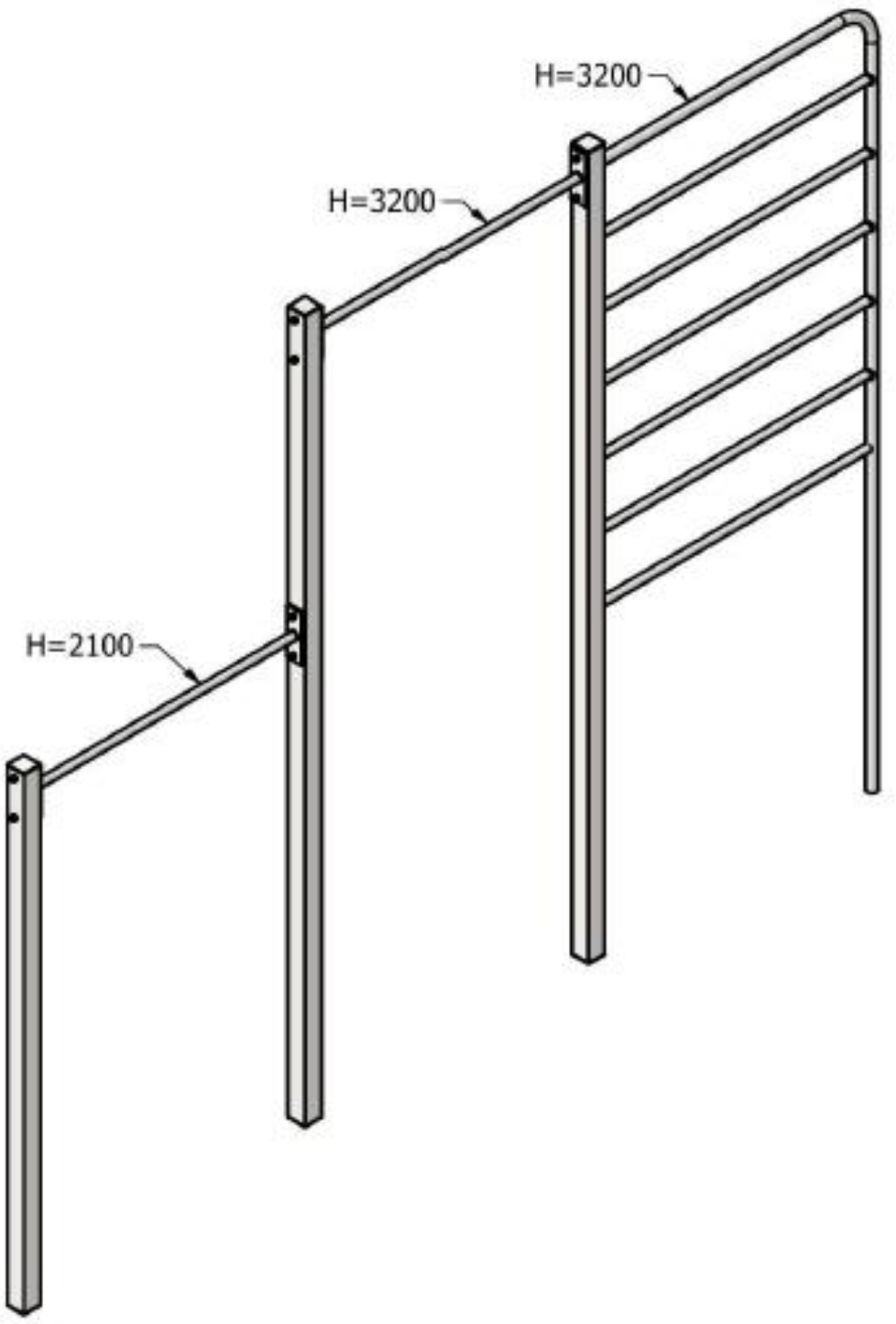

Mounting method

Mounting I (M12x110)

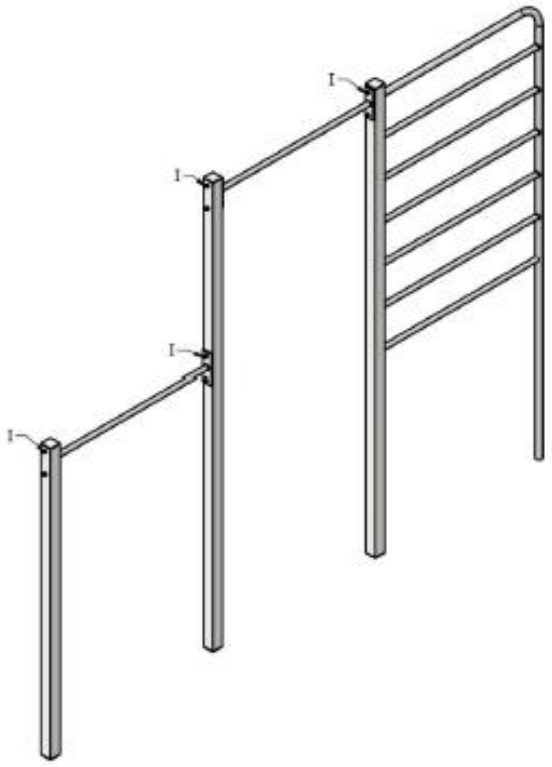

1. Plastic cap M12
2. Hex bolt M12x110
3. Washer M12
4. Rubber washer
5. Self-locking nut M12
6. Post (Profile 80x80)
7. Screw-on element

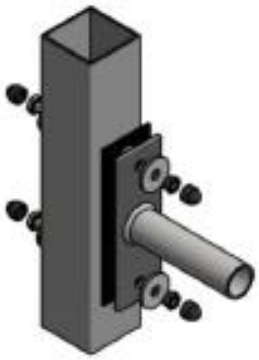



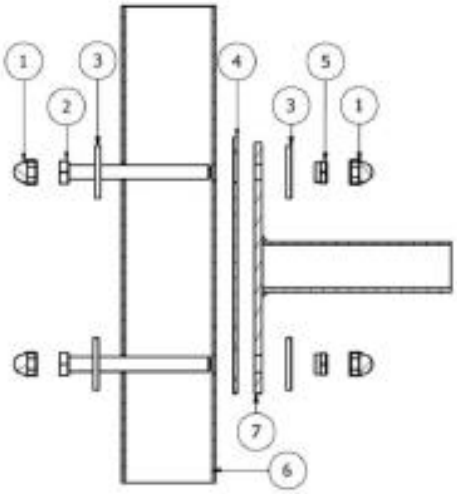

Foundations

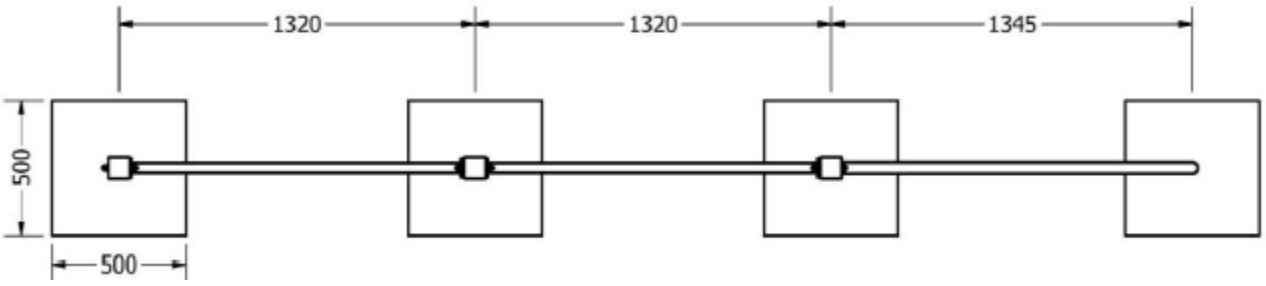

Foundation depth

