INSTALLATION GUIDE

GIMNASTIC RAILS 1

Code: KS-SW-16



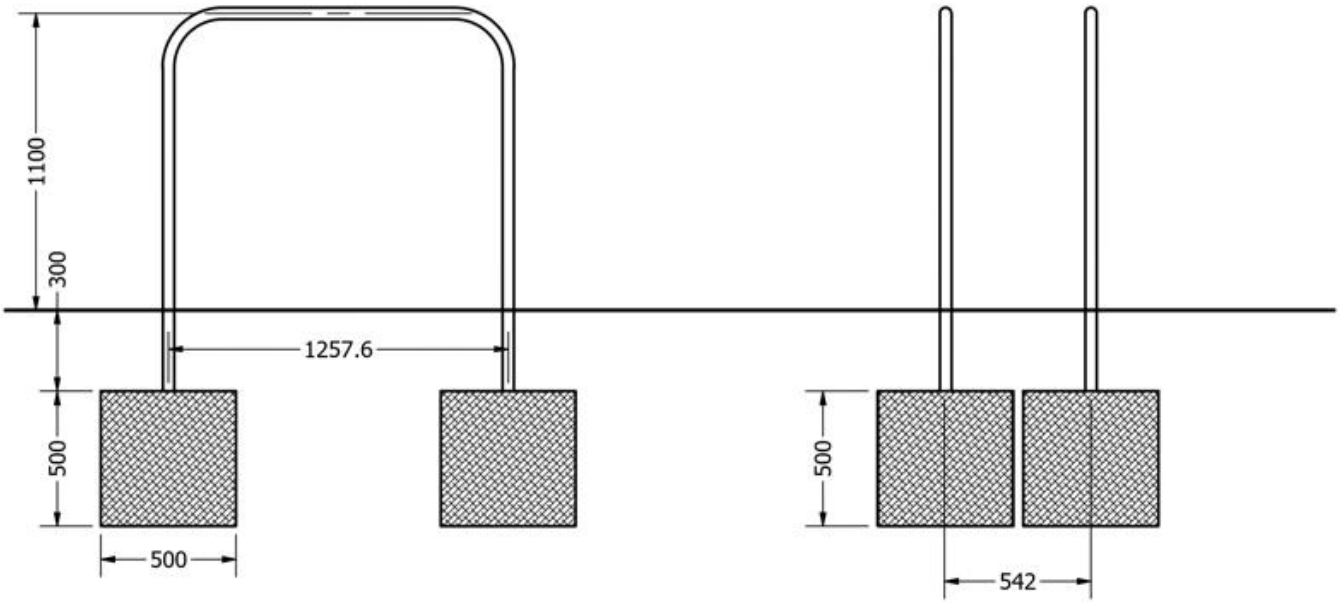

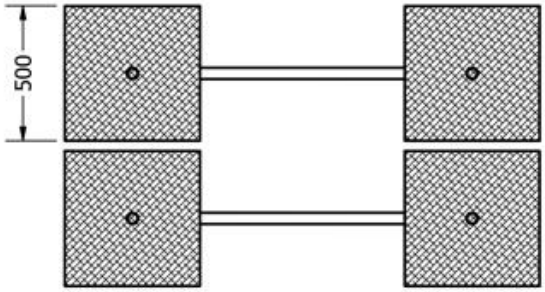

Foundation 300 mm below ground level.
Minimum foundation dimensions
500x500x500 mm.

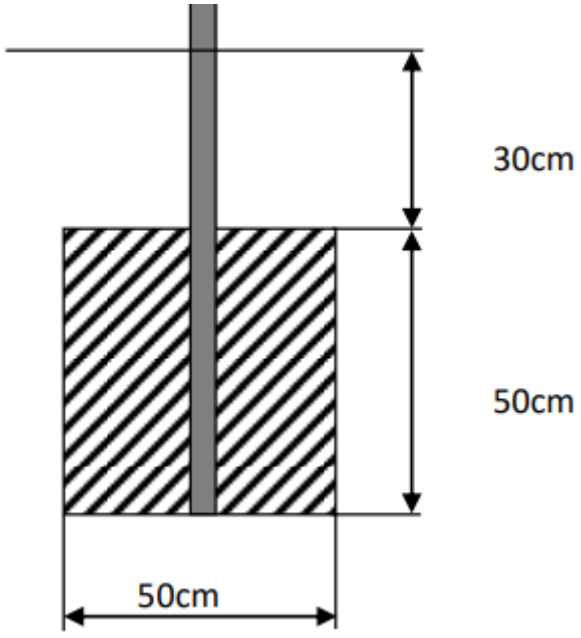

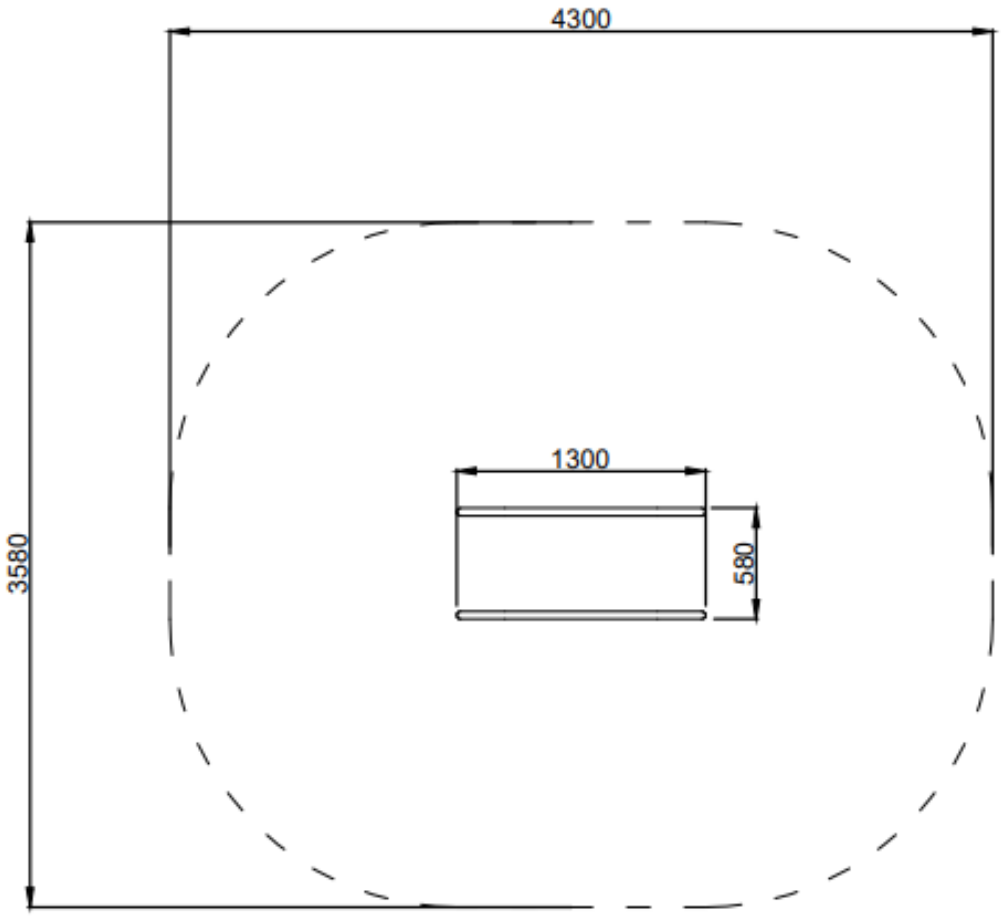
4300
3580
1300
580