CLIMBING STEPS

KS-SW-38

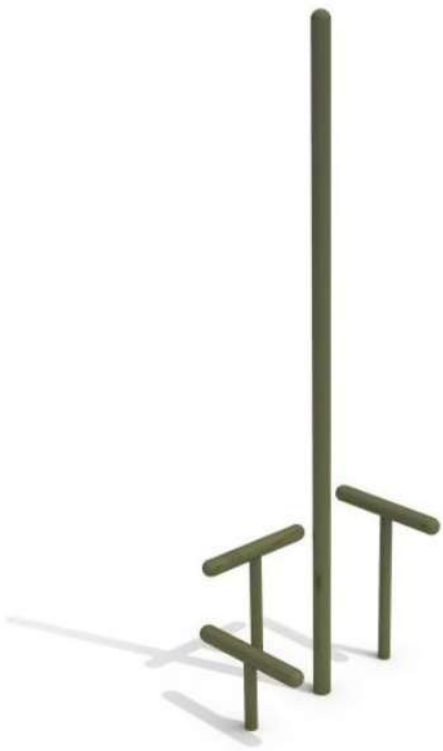

Inter Play
PHONE: +48 91 506 50 41, EXPORT@INTER-PLAY.EU, WWW.INTER-PLAY.EU

v.1-07.03.2024 AS

PARTS	
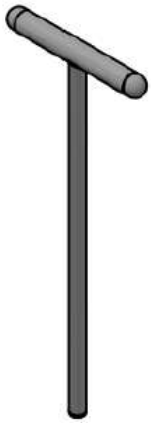	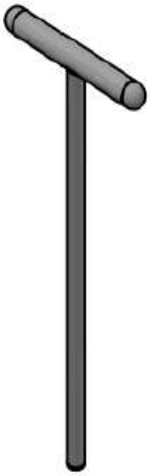
1. 1 pc.	2. 1 pc.
	
3. 1 pc.	4. 1 pc.

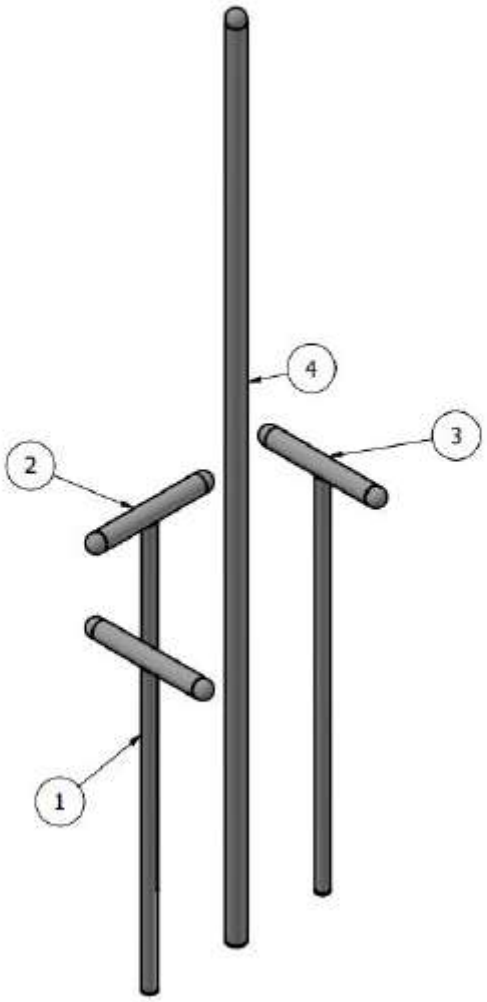

INTER PLAY
PHONE: +48 91 506 50 41, EXPORT@INTER-PLAY.EU, WWW.INTER-PLAY.EU

Foundation

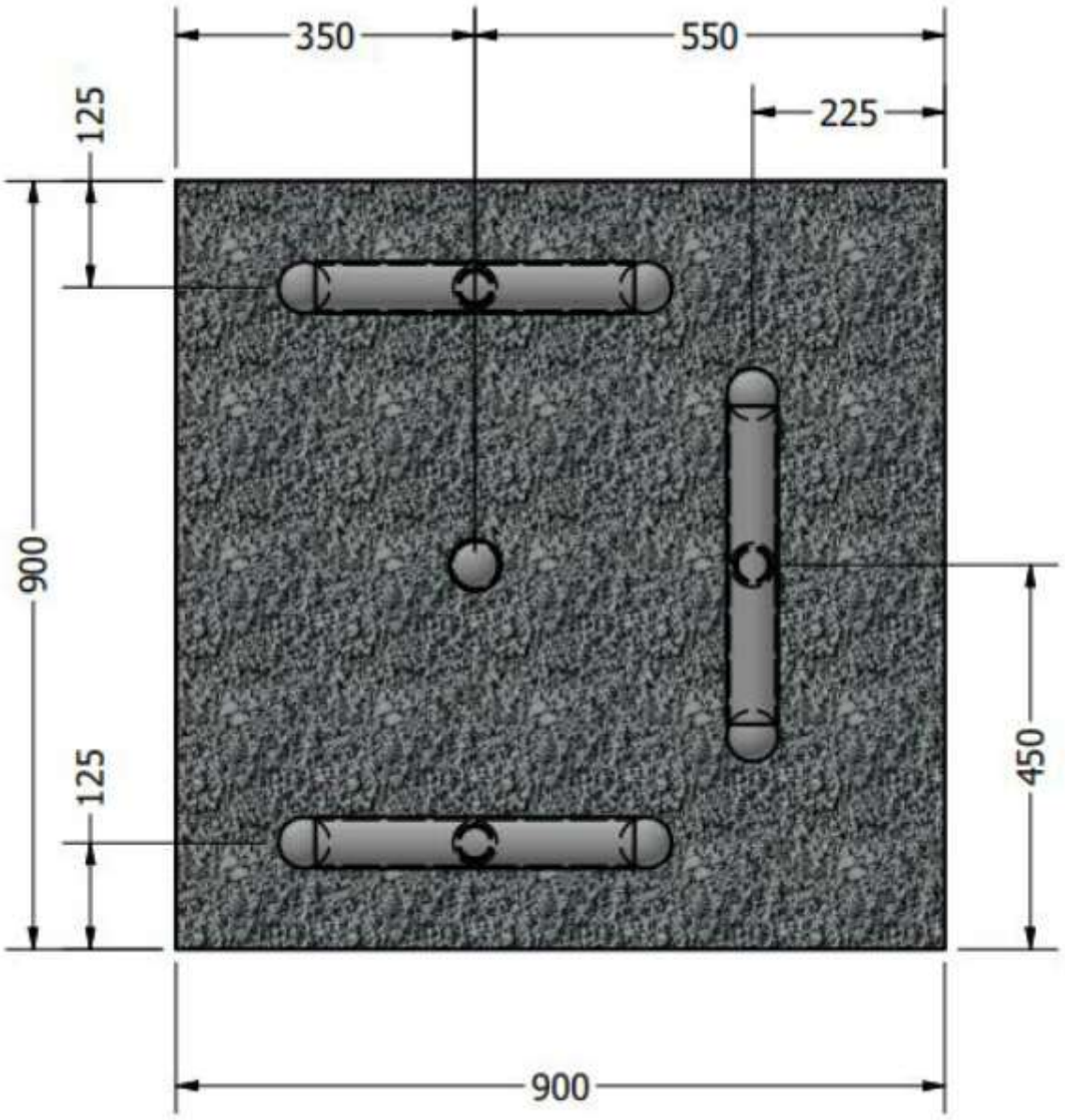

INTER PLAY
PHONE: +48 91 506 50 41, EXPORT@INTER-PLAY.EU, WWW.INTER-PLAY.EU

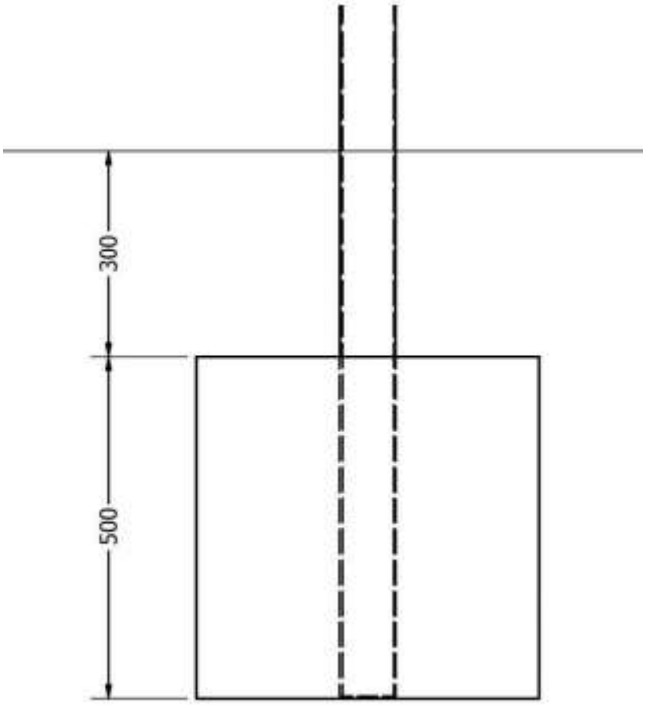
300
500

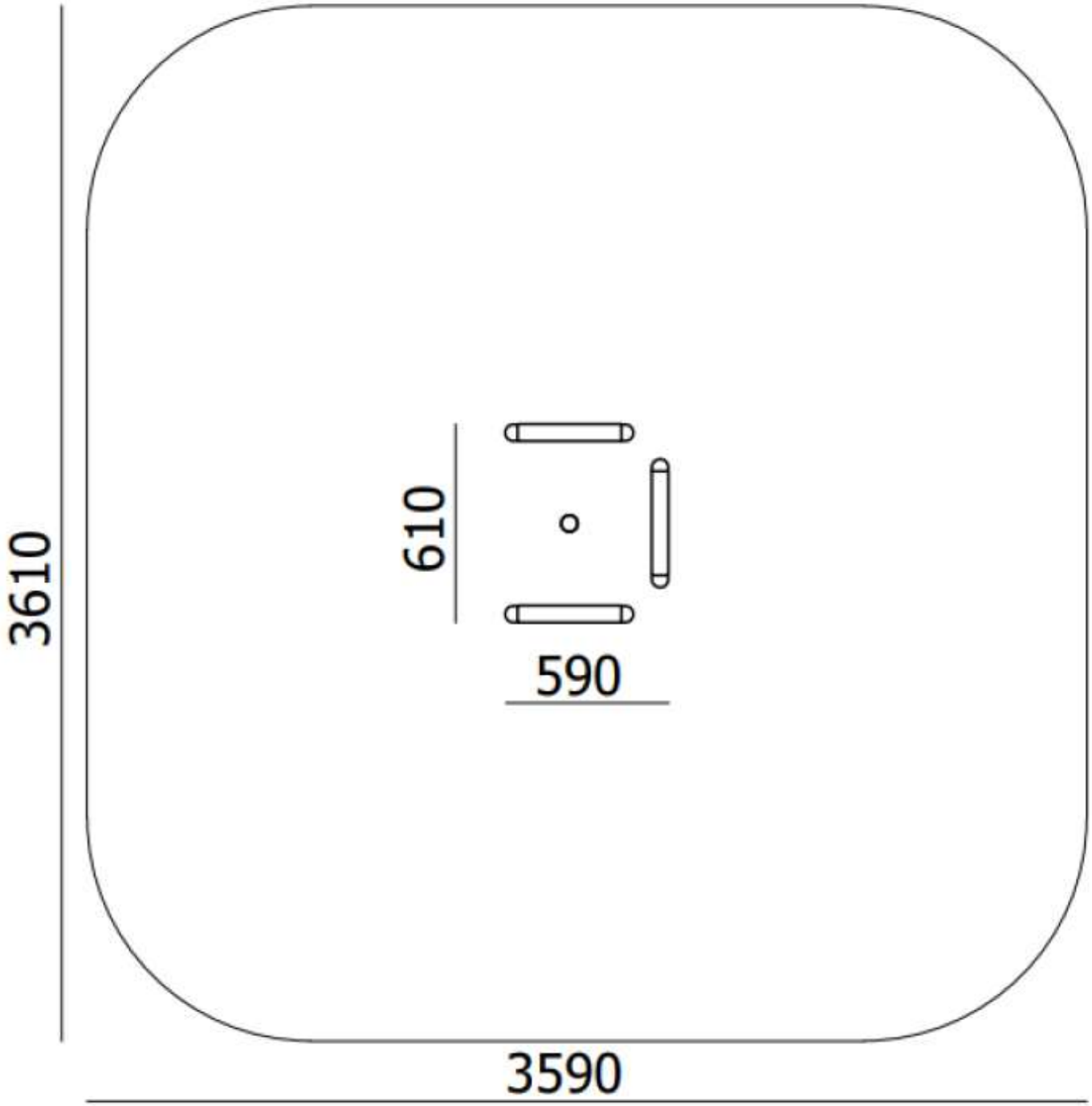

INTER PLAY
PHONE: +48 91 506 50 41, EXPORT@INTER-PLAY.EU, WWW.INTER-PLAY.EU