INSTALLATION GUIDE
STREET WORKOUT 7

Code: KS-SW-25



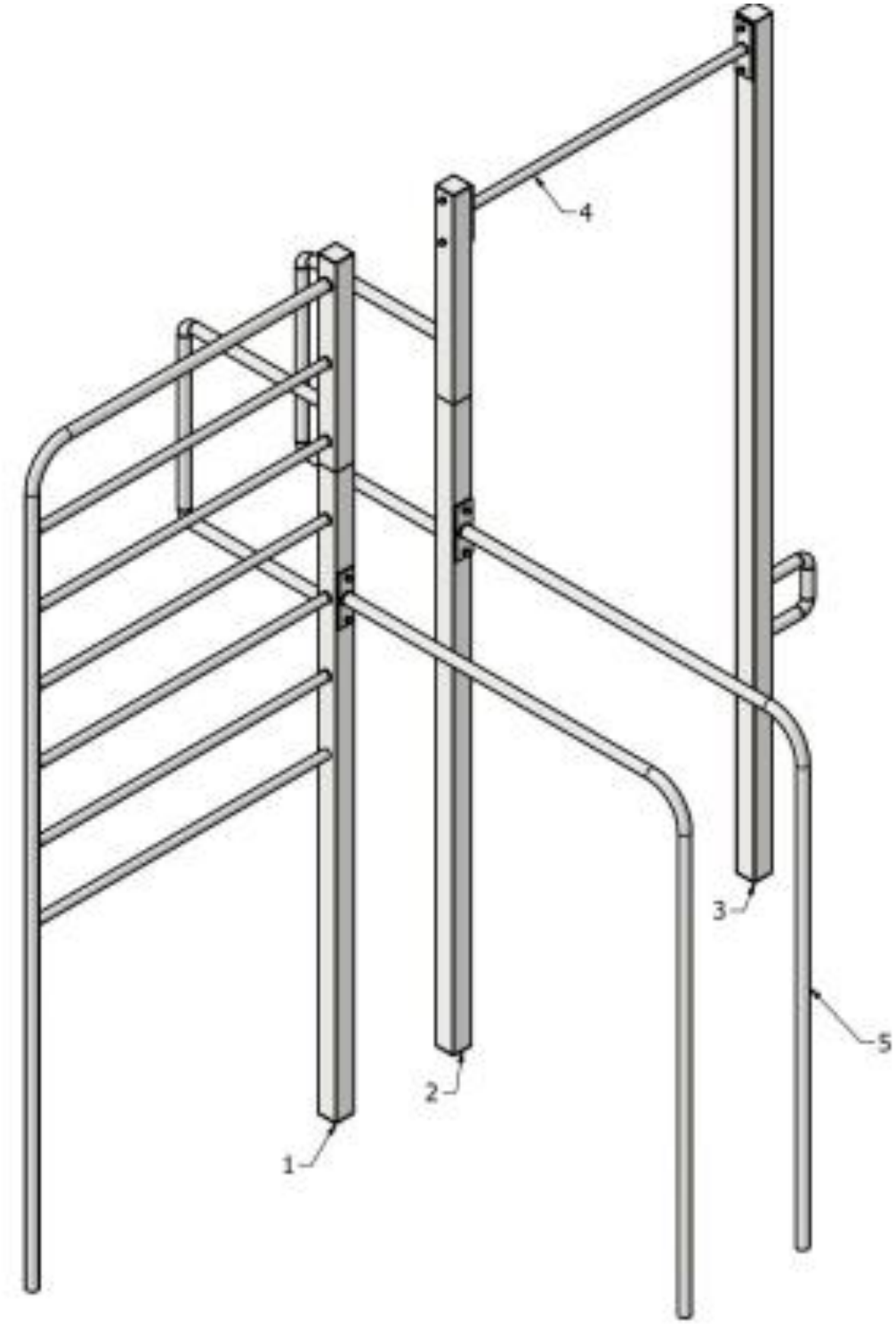
4
3
5
2
1

Elements	
	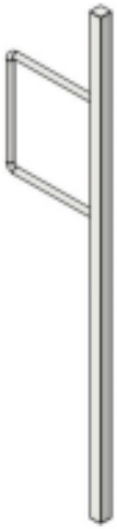
1. H=3300 1 pc.	2. H=3300 1 pc.
	
3. H=3300 1 pc.	4. L=1240 1 pc.
	
5. H=1900 2 pcs.	

Heighs

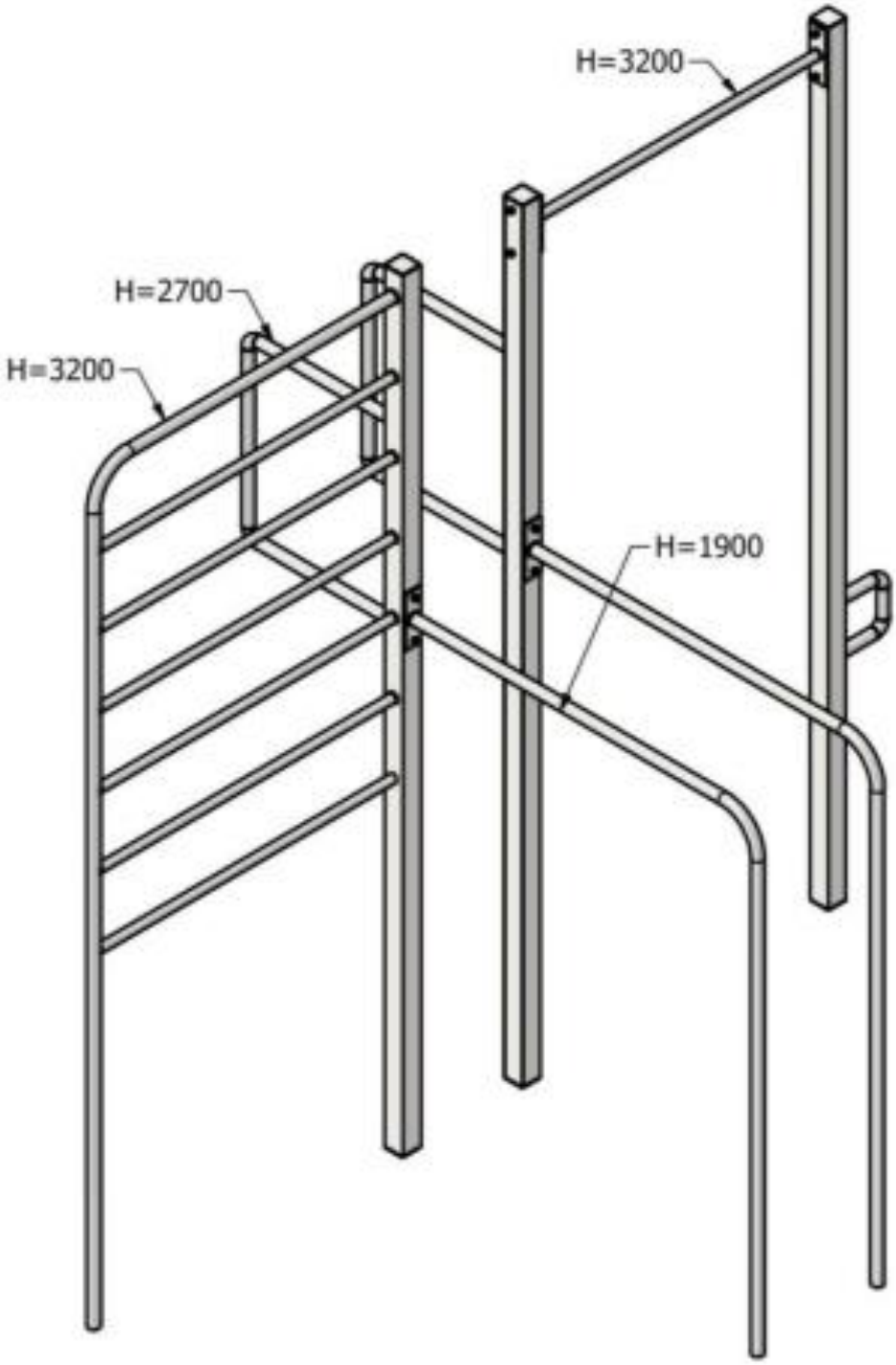

Mounting method
Mounting I (M12x110)

1. Plastic cap M12
2. Hex bolt M12x110
3. Washer M12
4. Rubber washer
5. Self-locking nut M12
6. Post (Profile 80x80)
7. Screw-on element

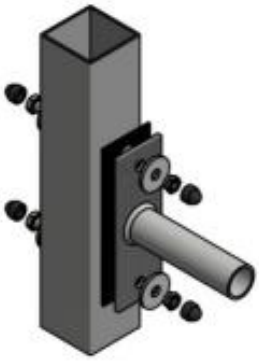

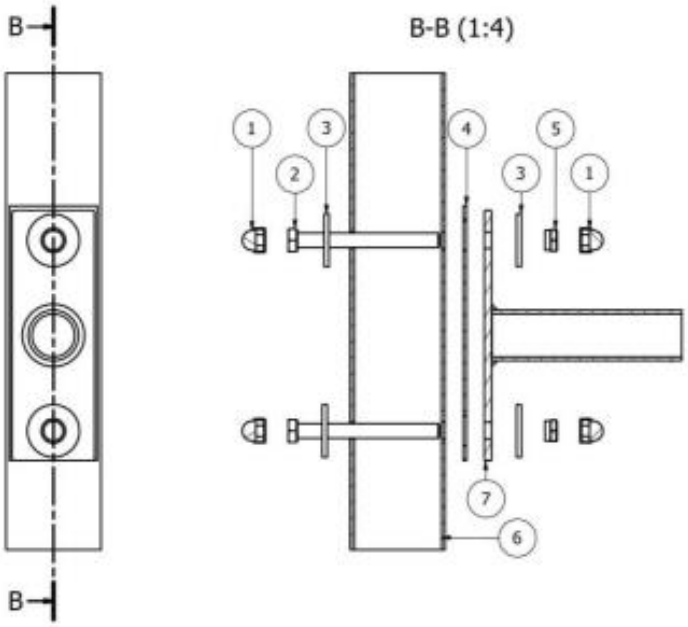

Foundations and foundation depth

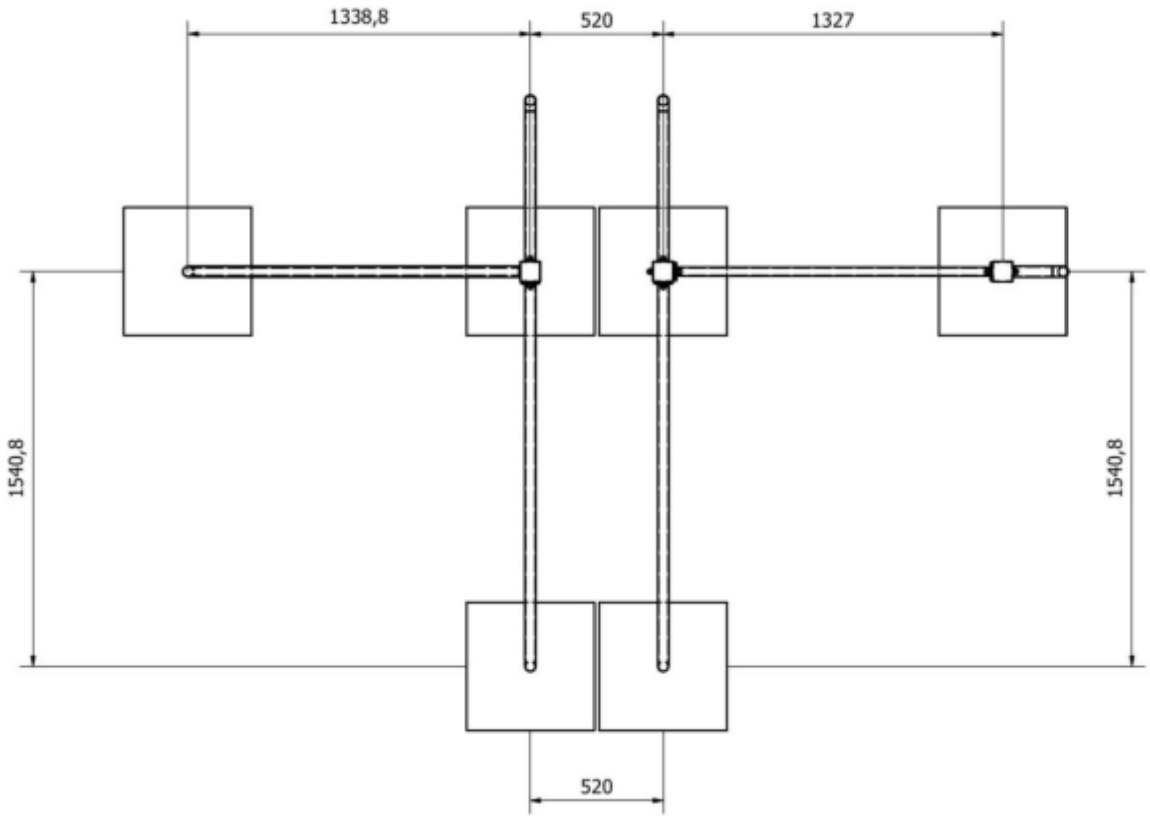

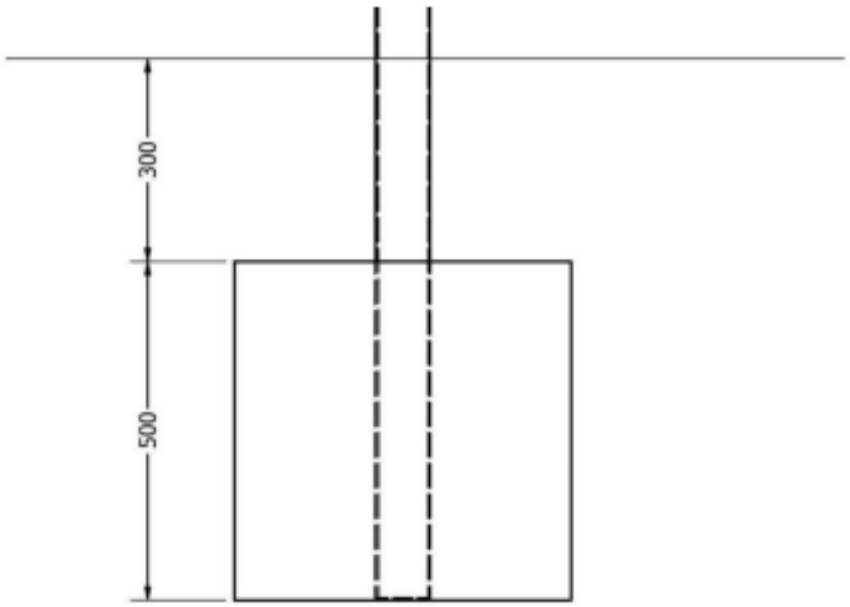

Safety zone

