INSTALLATION GUIDE
STREET WORKOUT 1

Code: KS-SW-19



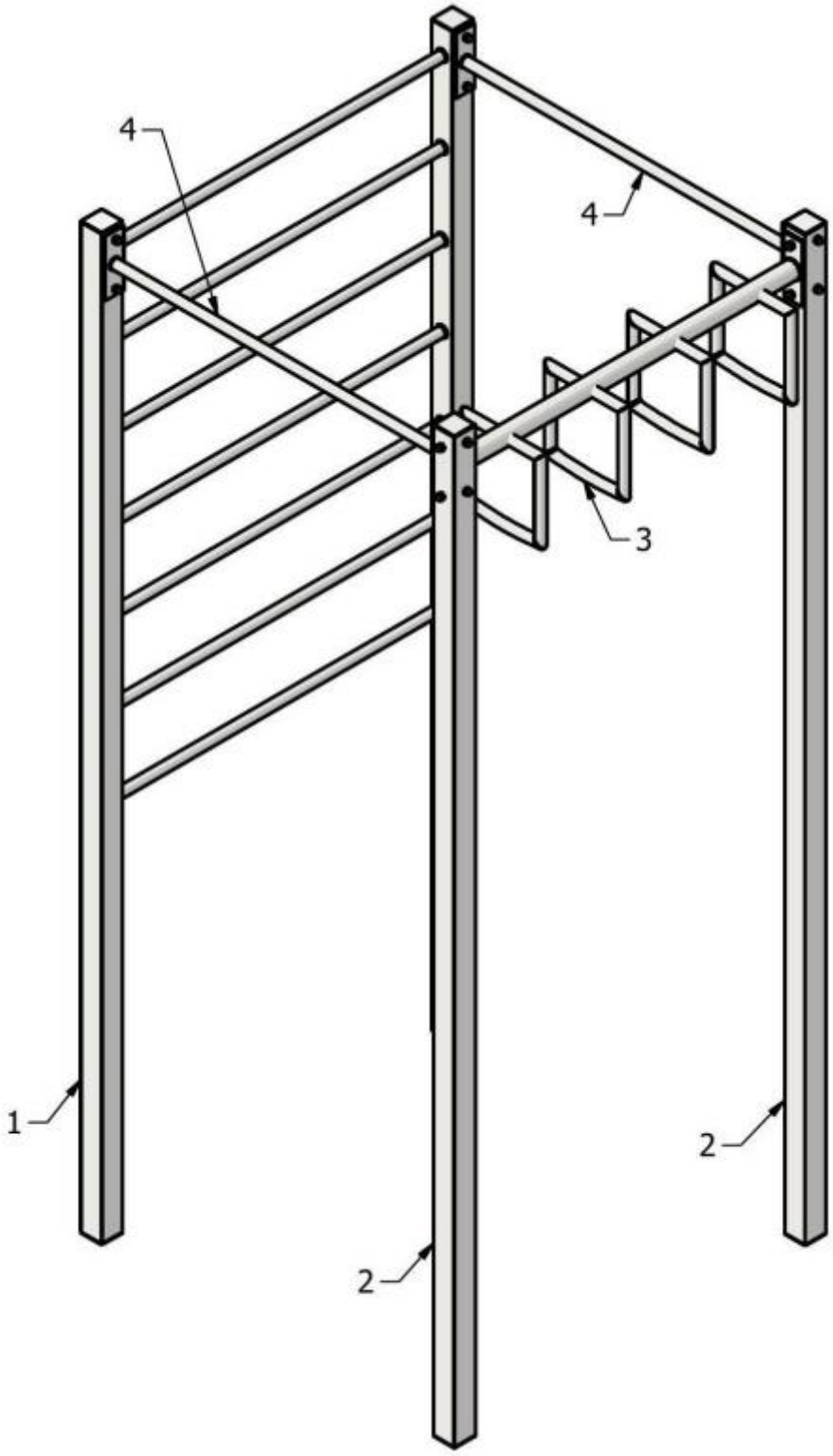
4
4
3
1
2
2

Elements	
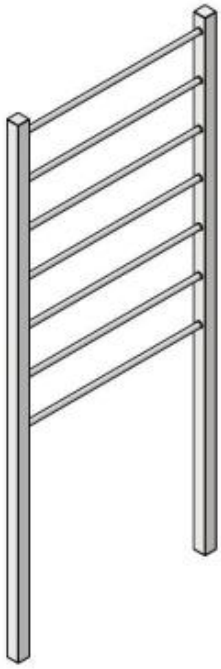	
H=3300 1 pc.	H=3300 2 pcs.
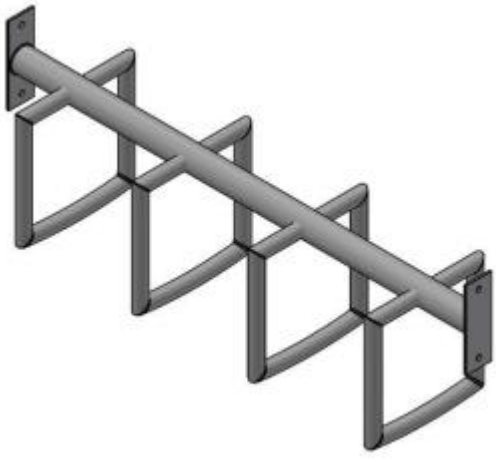	
L=1240 1 pc.	L=1240 2pc.

Heighs

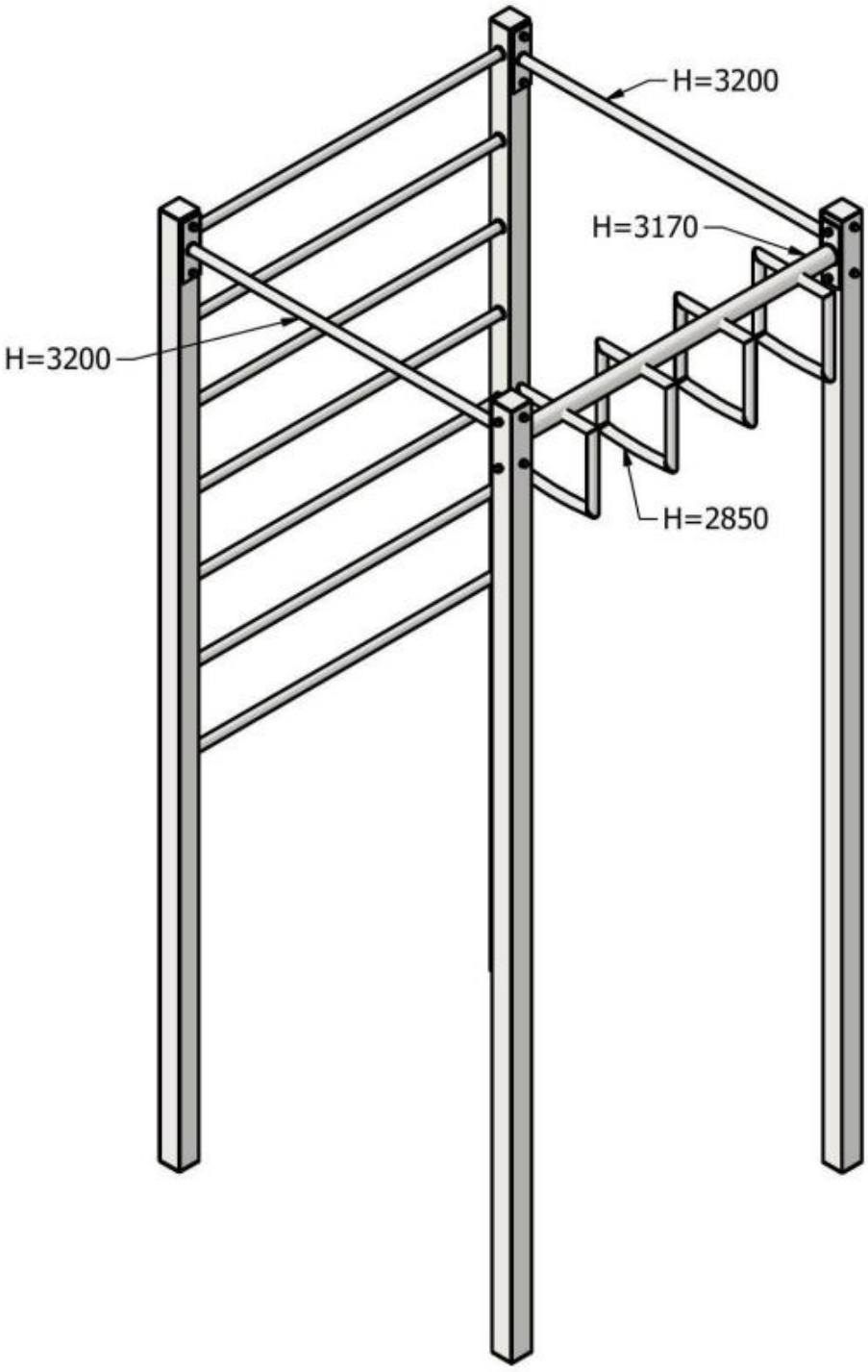

Mounting method

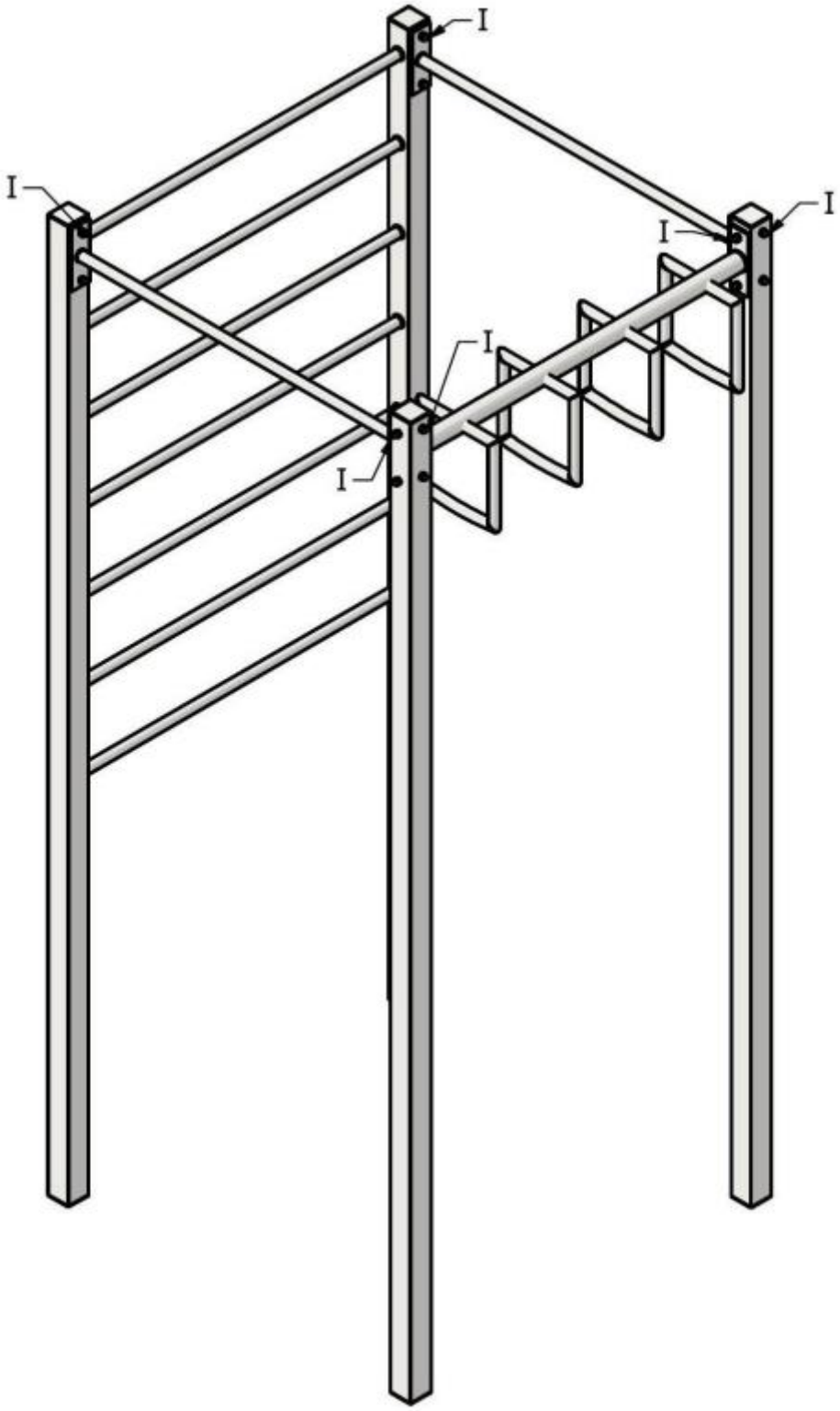

Mounting I (M12x110)

1. Plastic cap M12
2. Hex bolt M12x110
3. Washer M12
4. Rubber washer
5. Self-locking nut M12
6. Post (Profile 80x80)
7. Screw-on element

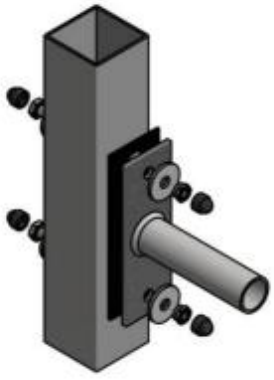

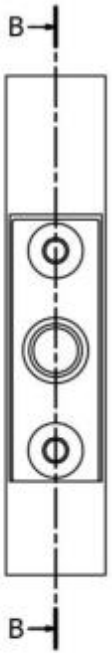

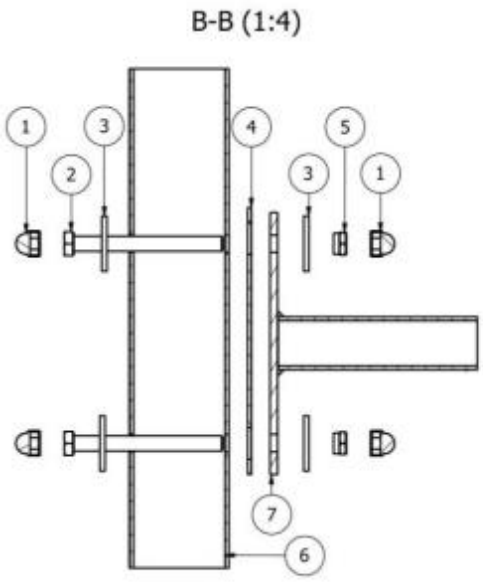

Foundations and foundation depth

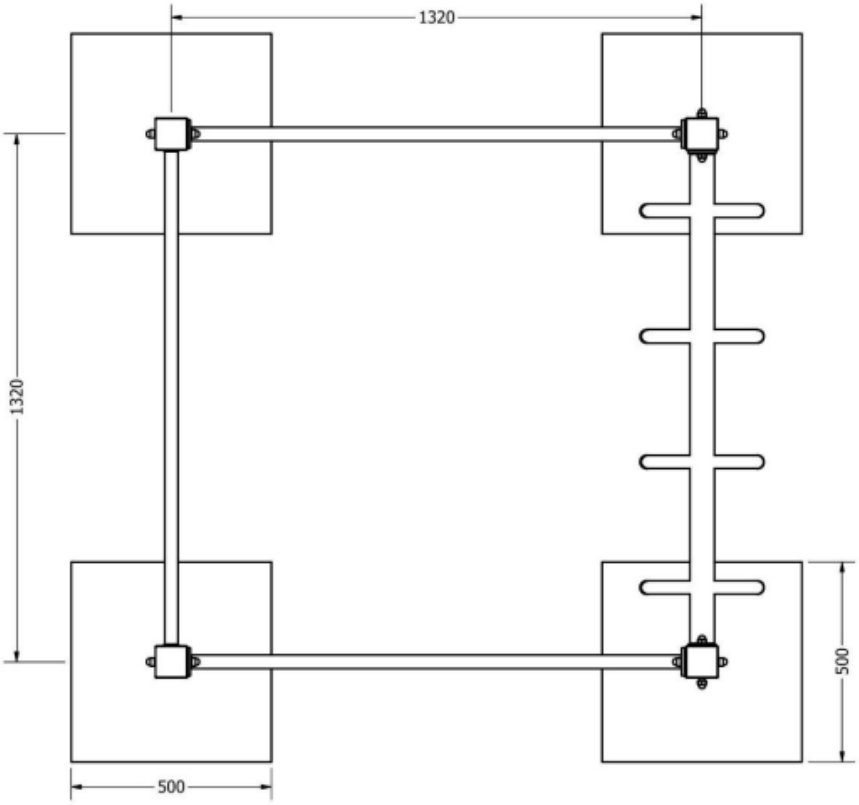

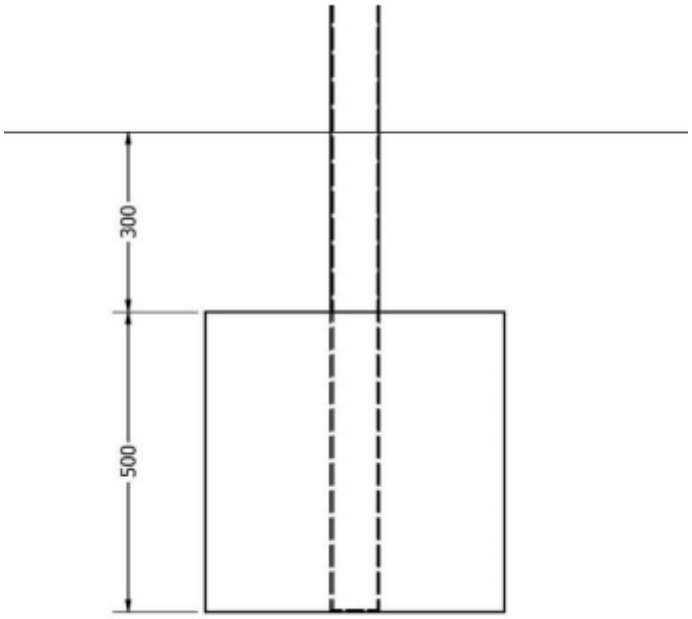

Safety zone

