SLALOM

KS-SW-18

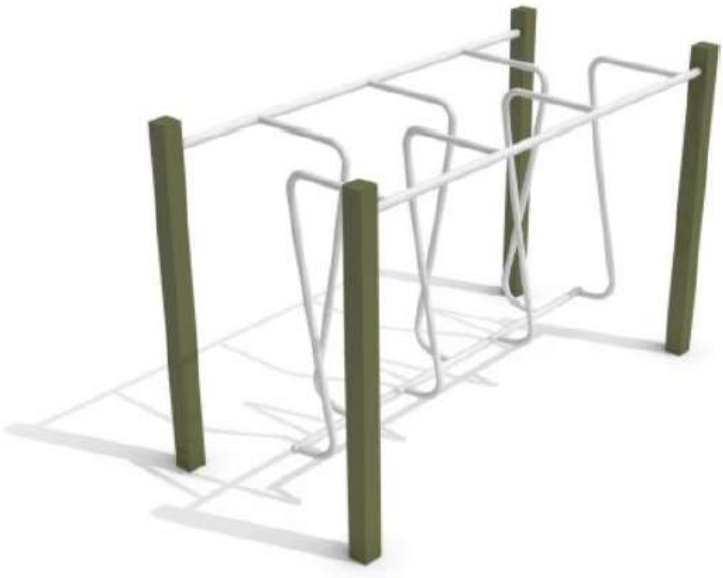

Inter Play
PHONE: +48 91 506 50 41, EXPORT@INTER-PLAY.EU, WWW.INTER-PLAY.EU

v.2-30.10.2025

PARTS LIST	
	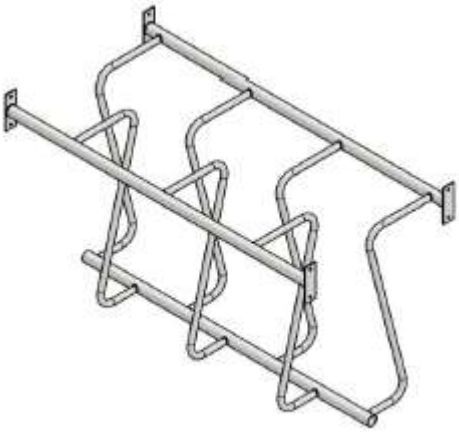
1. H= 2200 4 pcs.	2. 1 pc.

Mounting method

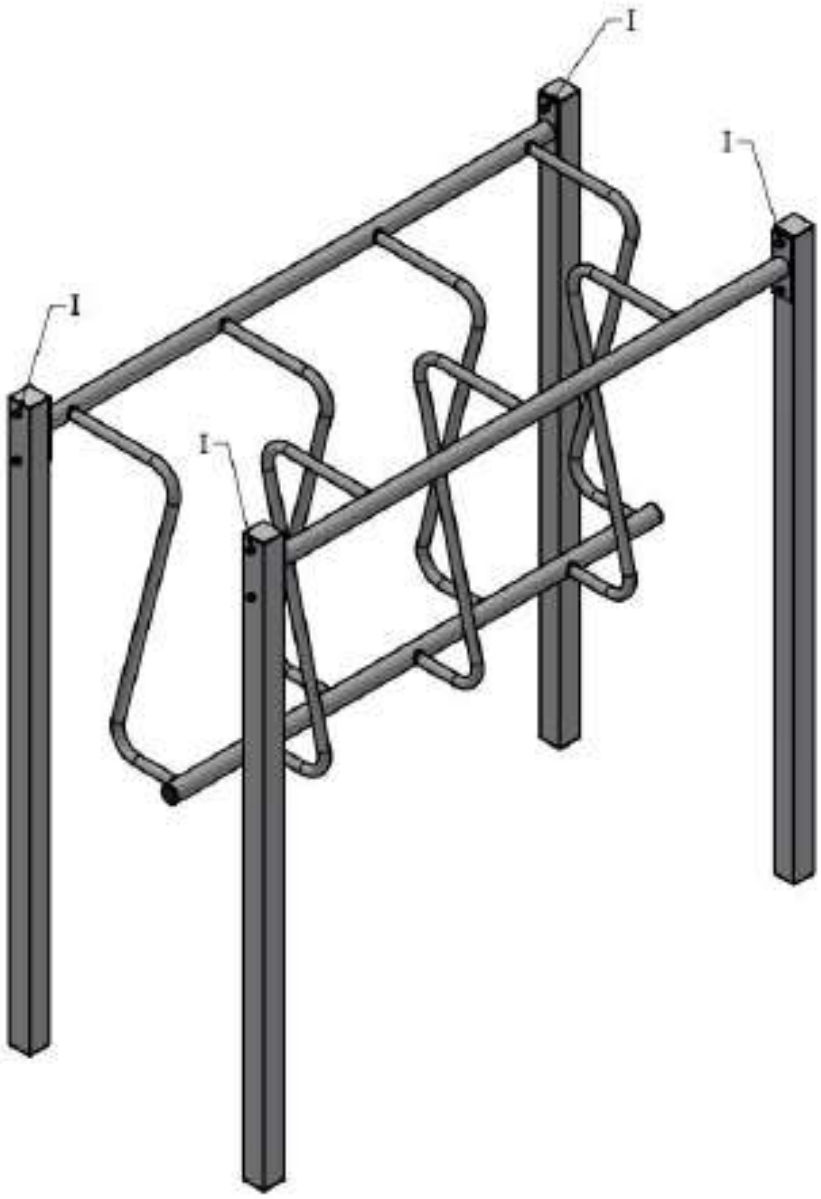

Mounting I – (M10x110)

1. Plastic cap M12
2. Hex head bolt M12x110
3. Washer M12
4. Rubber washer
5. Self-locking nut M12
6. Post (Profile 80x80)
7. Fastened element

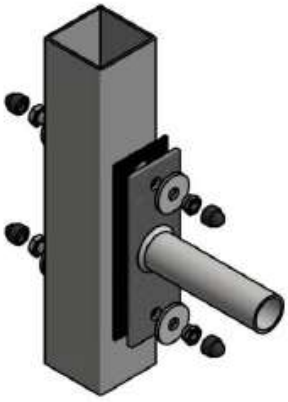

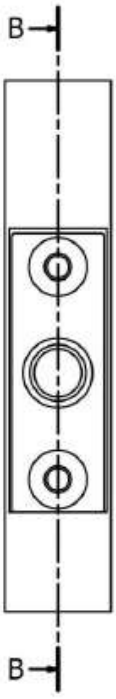

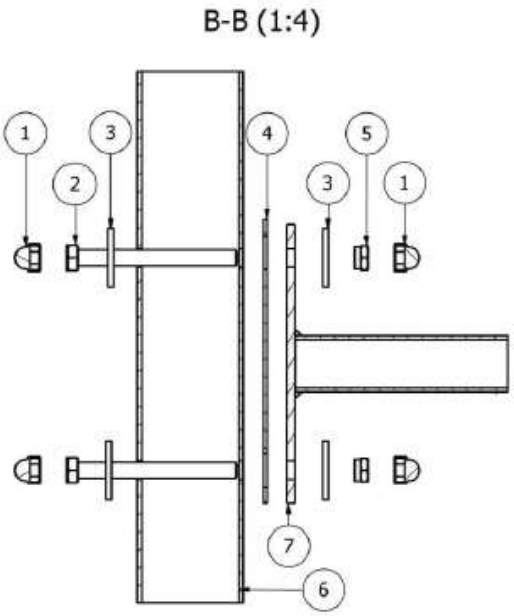

Foundation plan

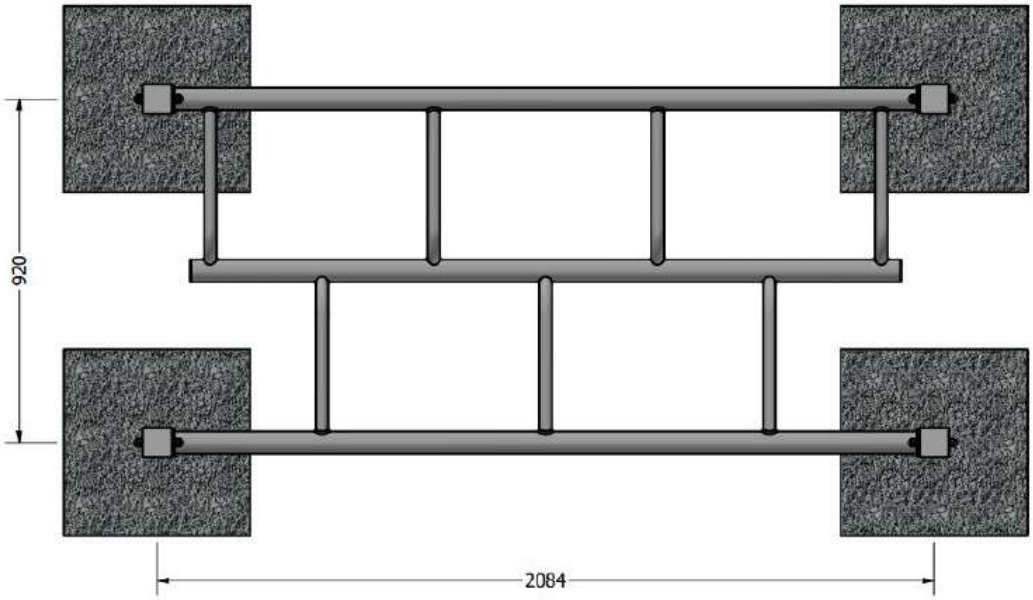

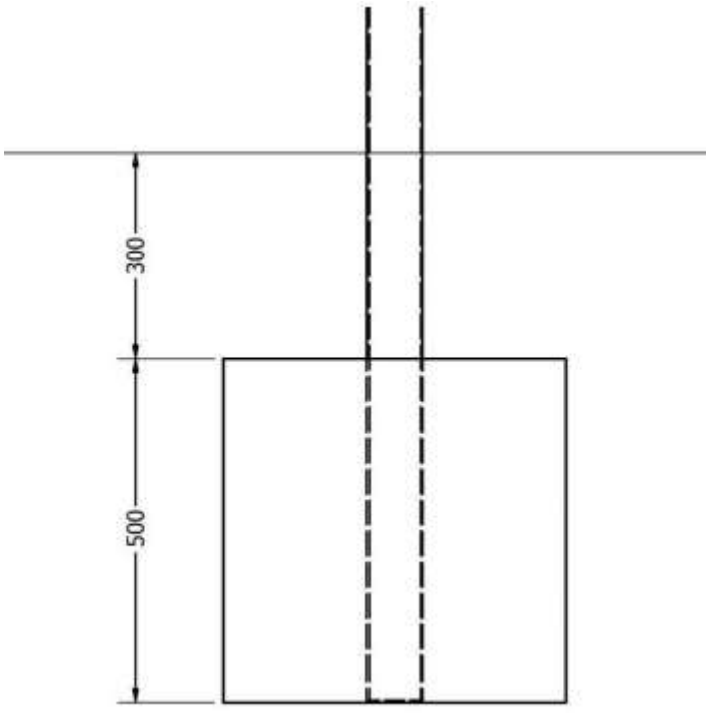

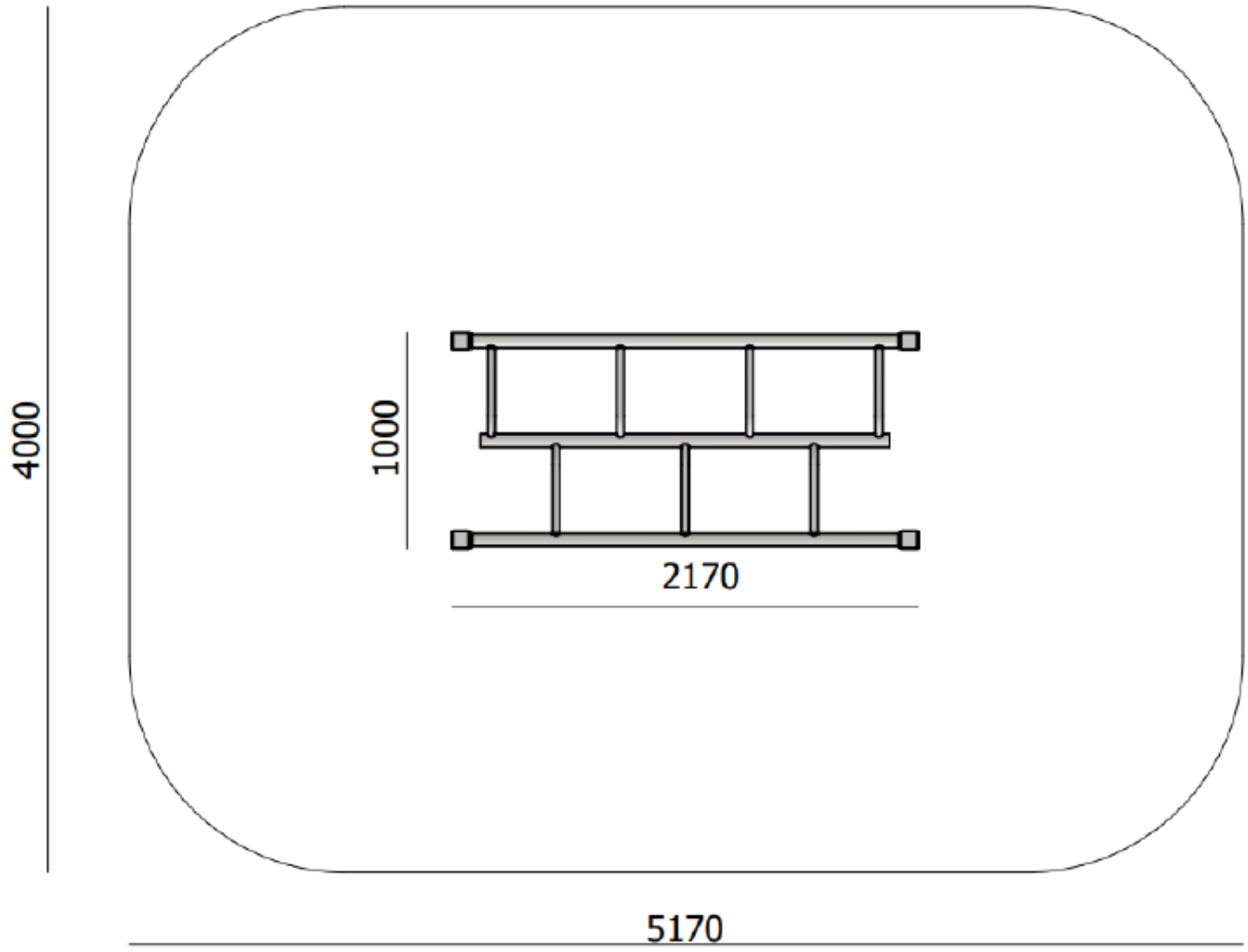
4000
1000
2170
5170