INSTALLATION GUIDE
STREET WORKOUT 9

Code: KS-SW-27

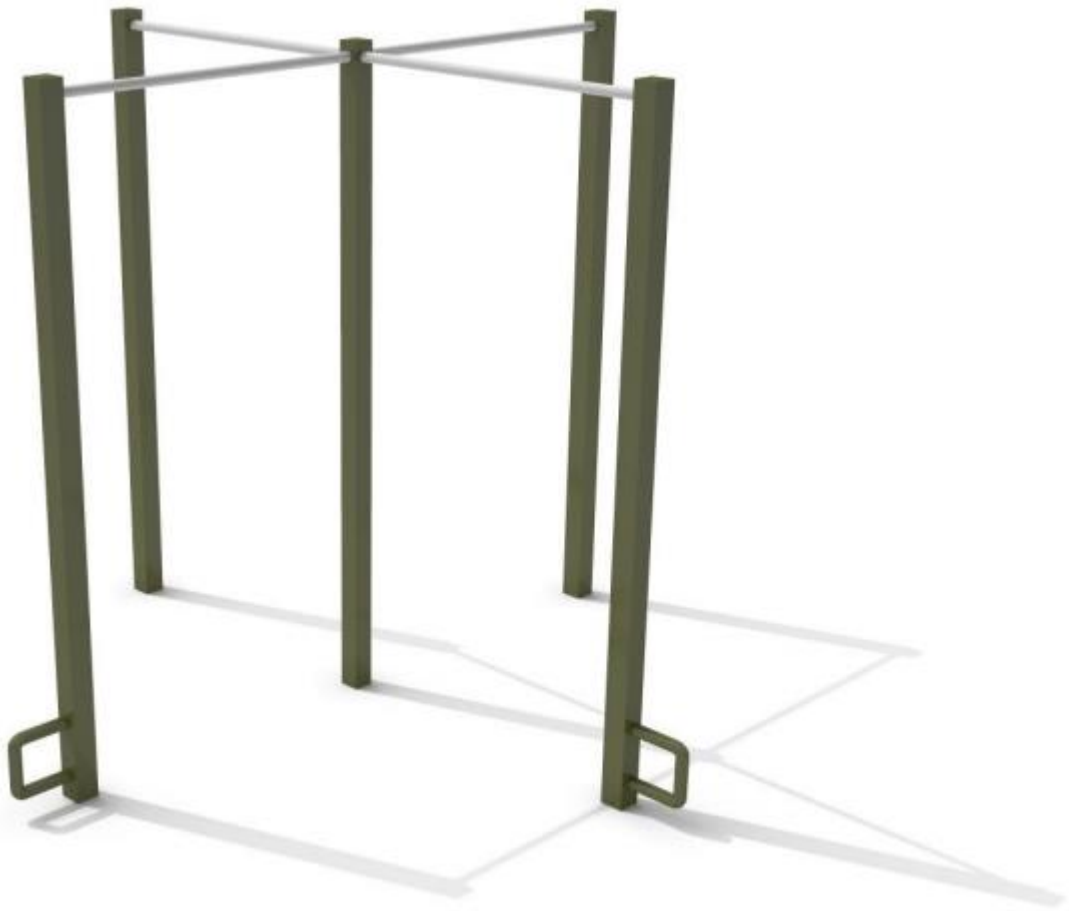

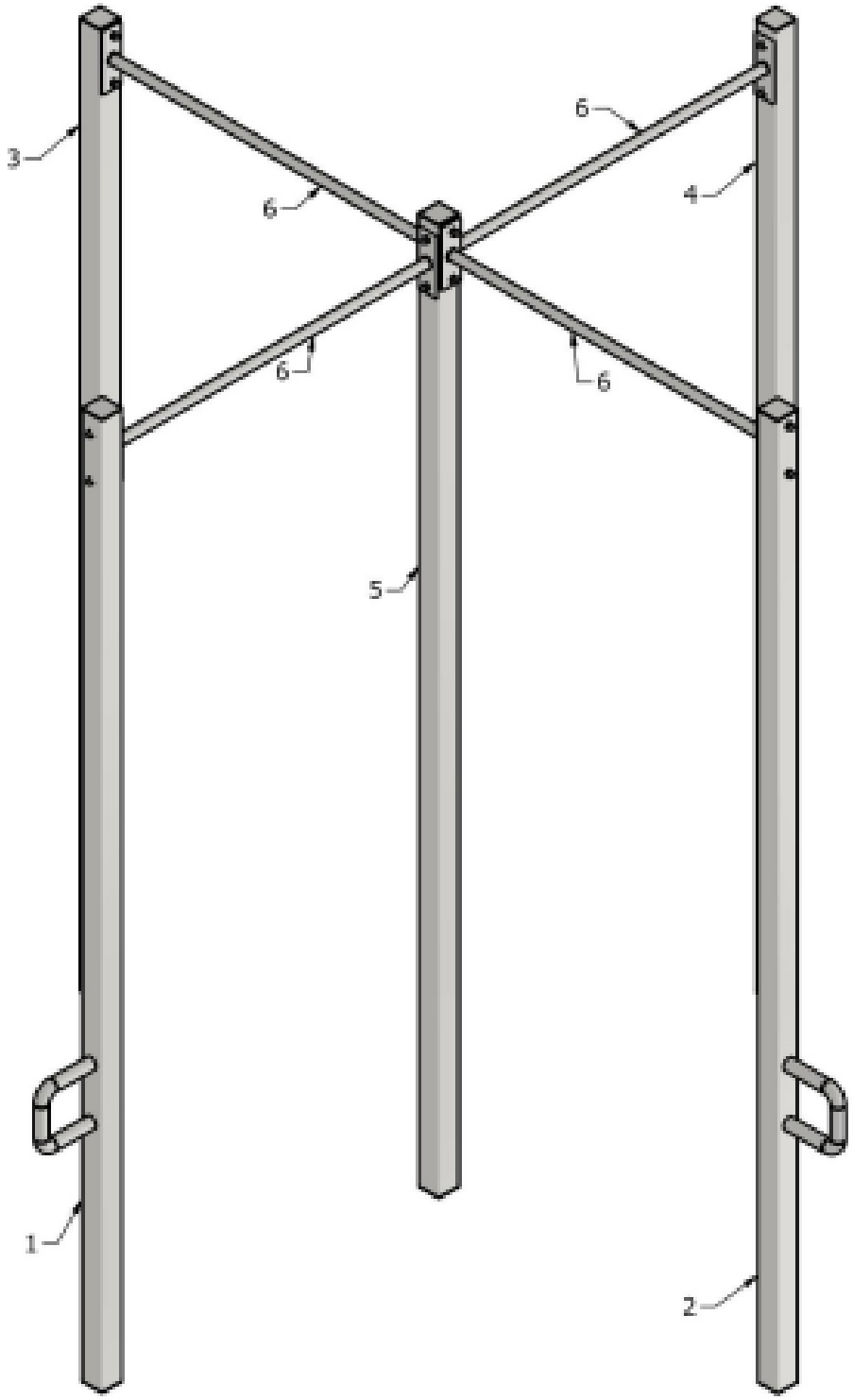
3
6
6
6
6
4
5
1
2

Elements	
	
H=3300 1 pc.	H=3300 1 pc.
	
H=3300 1 pc.	H=3300 1 pc.
	
H=3300 1 pc.	L=1240 4 pcs.

Heighs

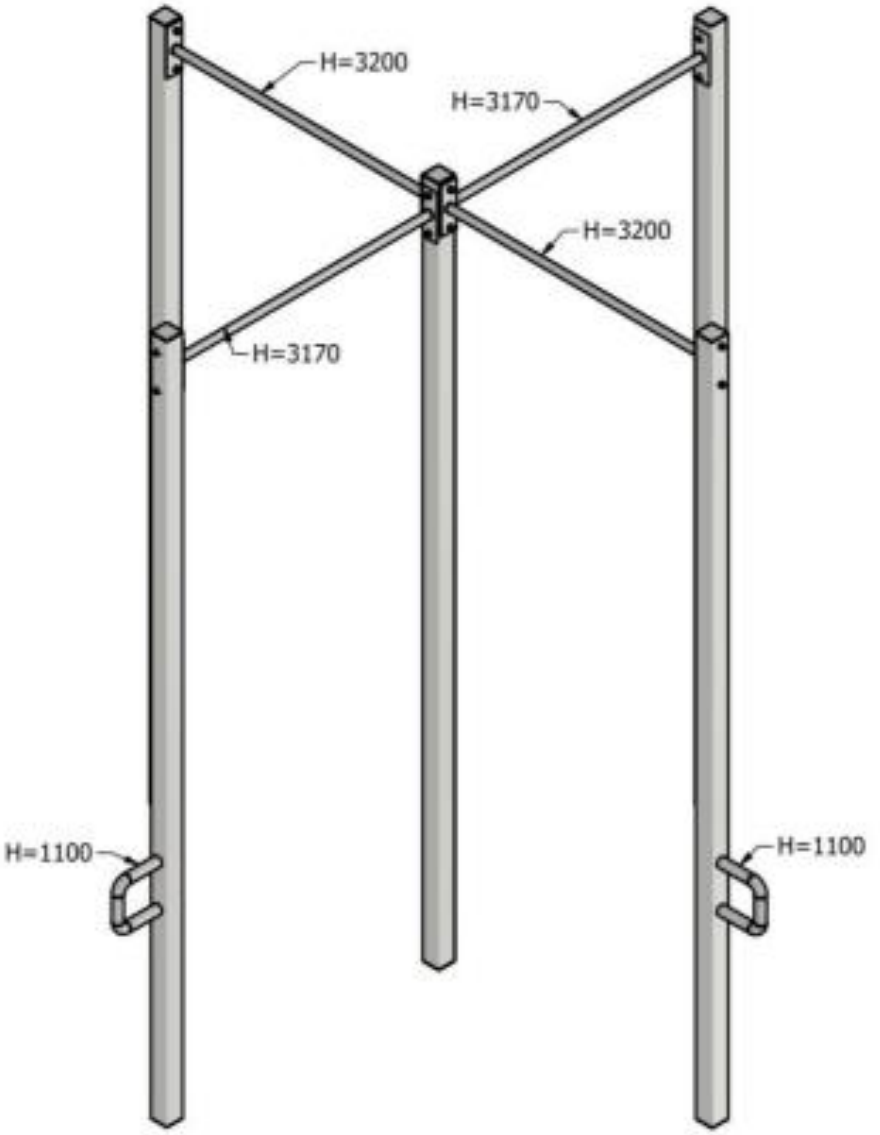

Mounting method
Mounting I (M12x110)

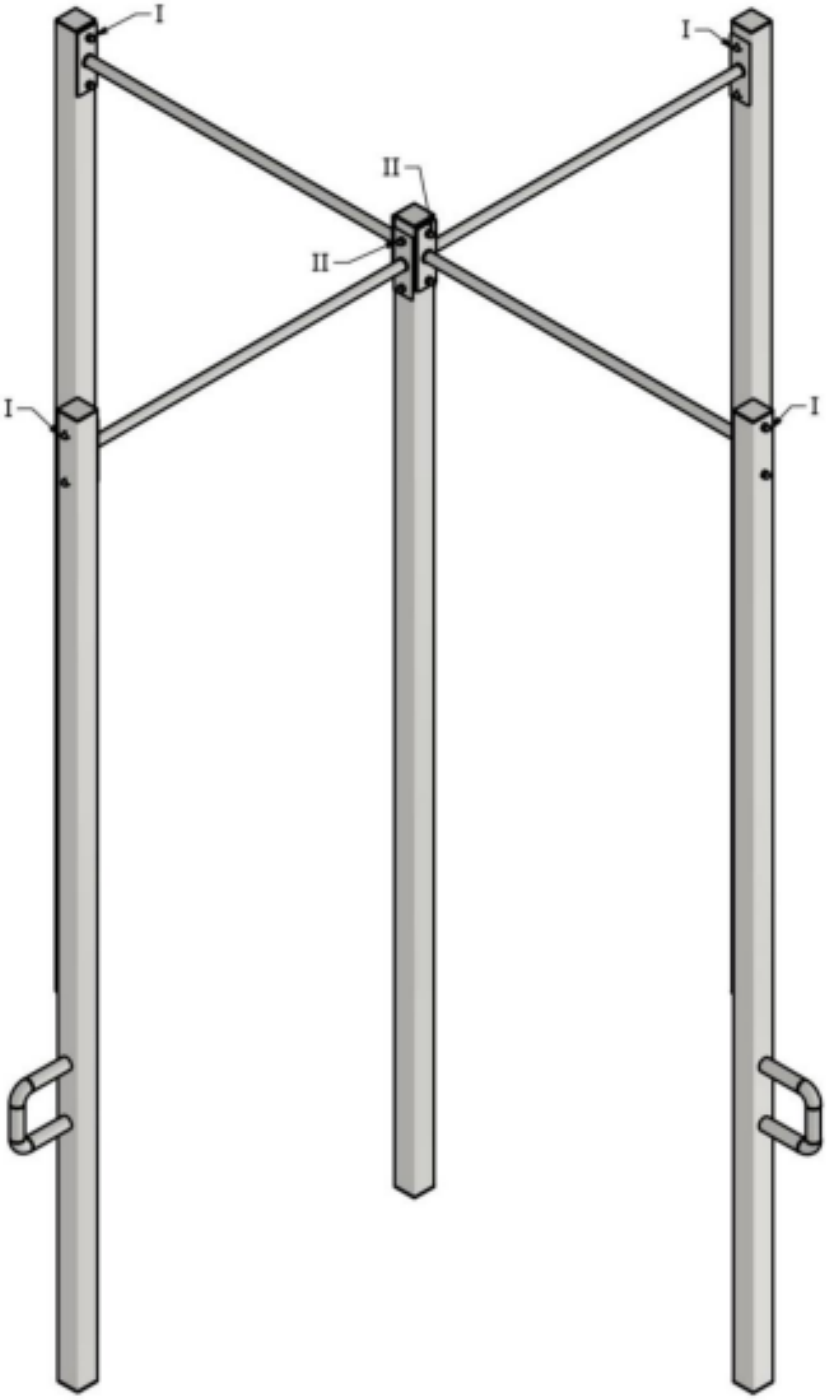

Mounting I (M12x110)

1. Plastic cap M12
2. Hex bolt M12x110
3. Washer M12
4. Rubber washer
5. Self-locking nut M12
6. Post (Profile 80x80)
7. Screw-on element

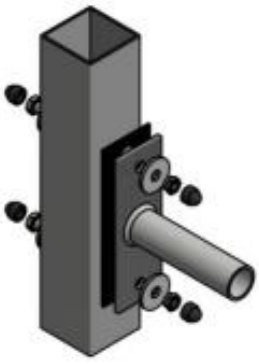



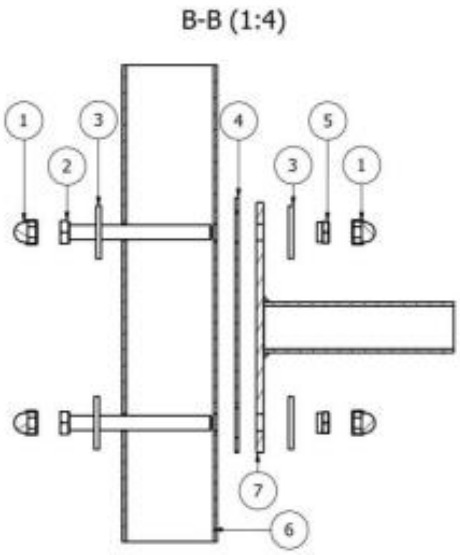

Mounting II (M12x115)

1. Plastic cap M12
2. Hex bolt M12x115
3. Washer M12
4. Rubber washer
5. Self-locking nut M12
6. Post (Profile 80x80)
7. Screw-on element

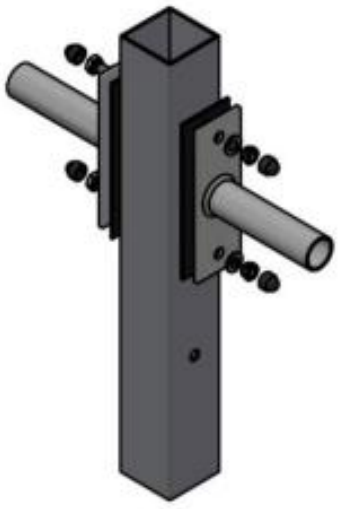

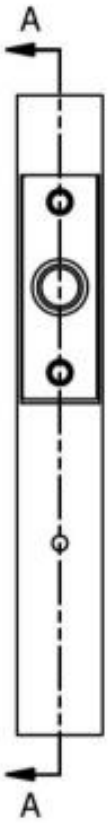

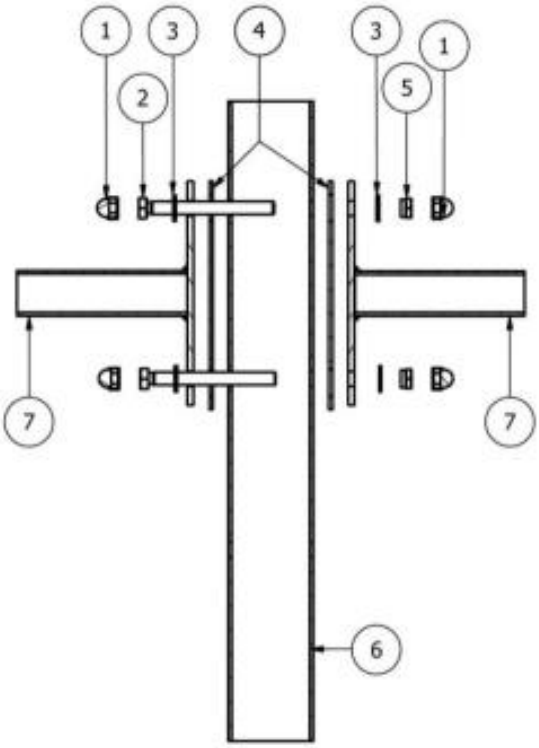

Foundations and foundation depth

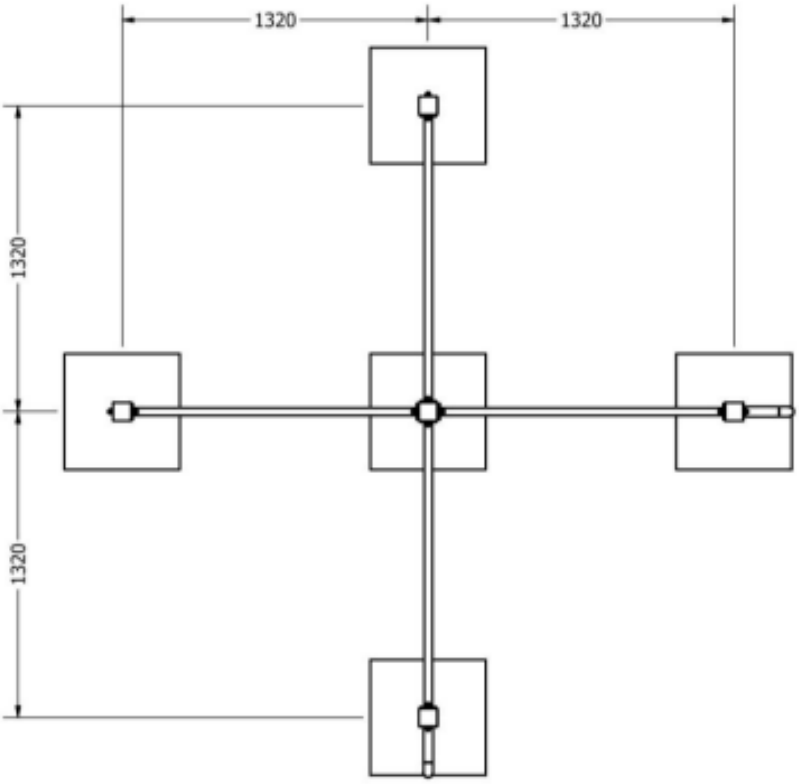

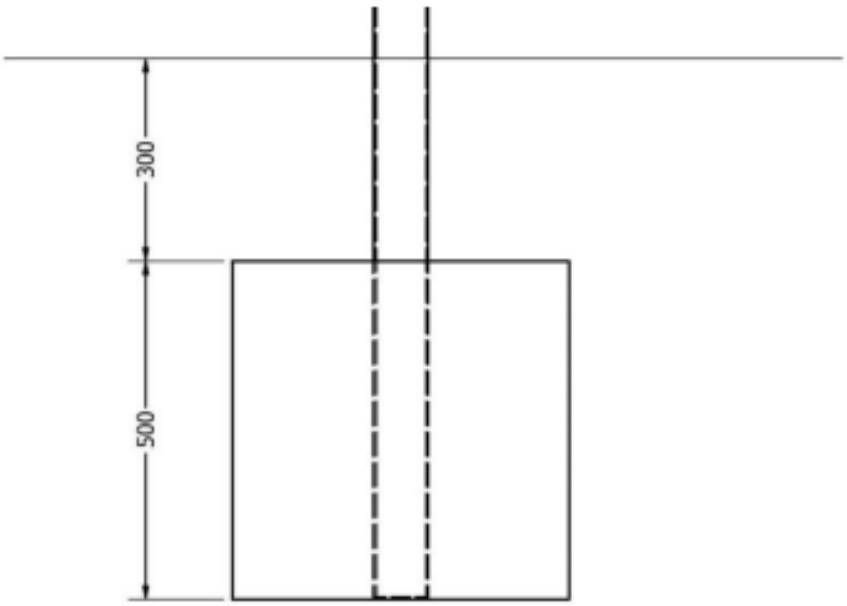

Safety zone

