Installation guide

HORIZONTAL BAR

Code: KS-SW-05



INTER-PLAY
tel. +48 91 506 50 41, export@inter-play.eu, www.inter-play.eu

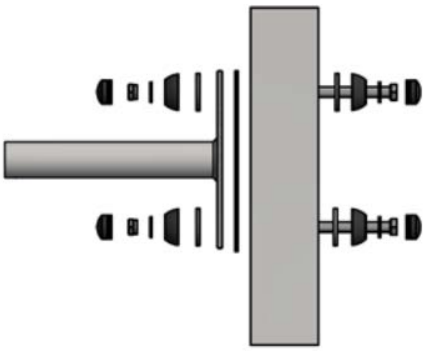

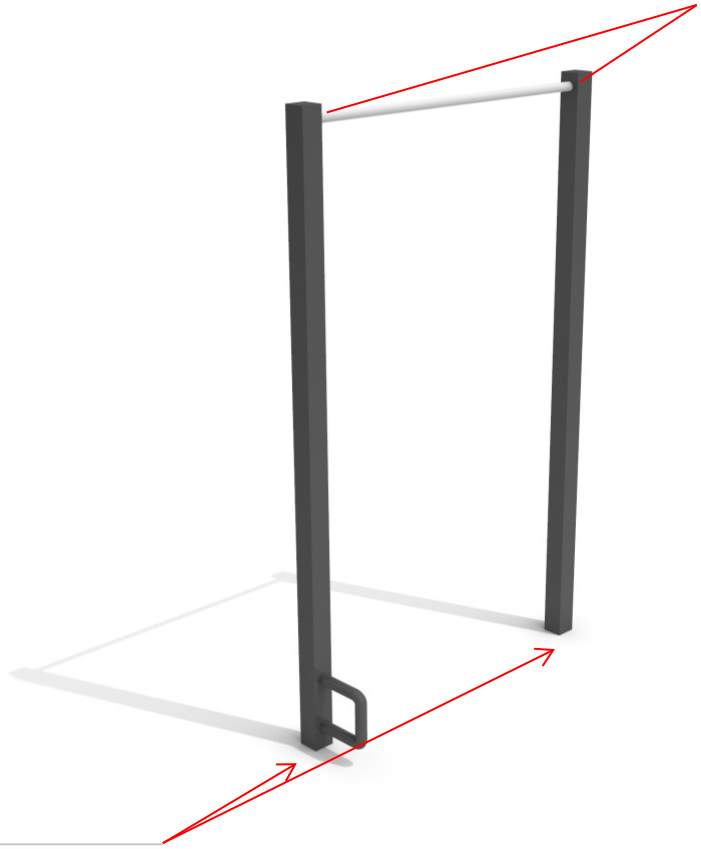

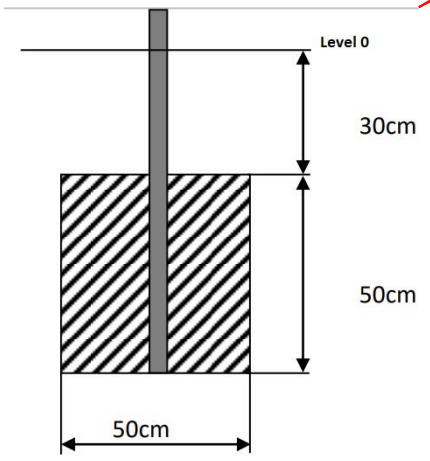
Level 0
30cm
50cm
50cm

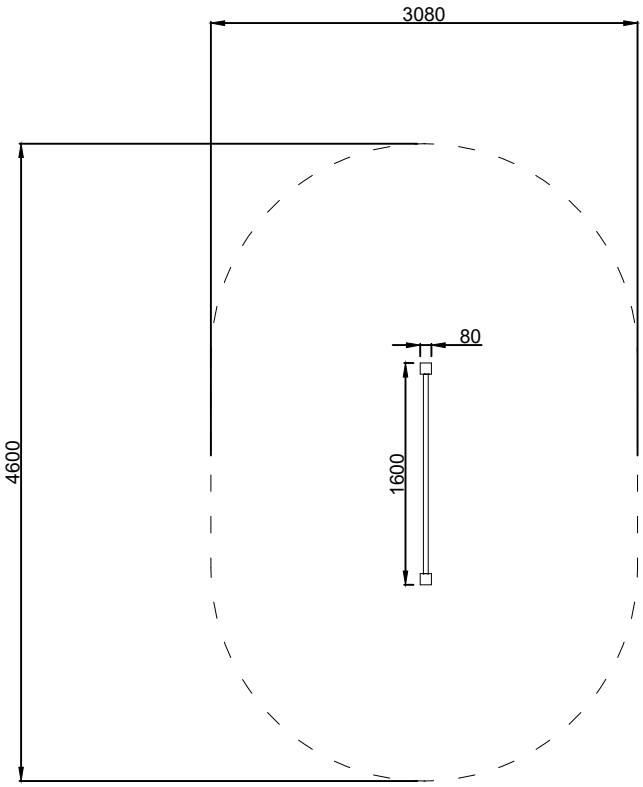

SAFETY AREA

SCALE
1:50