INSTALLATION GUIDE
HORIZONTAL LADDER 1

Code: KS-SW-10



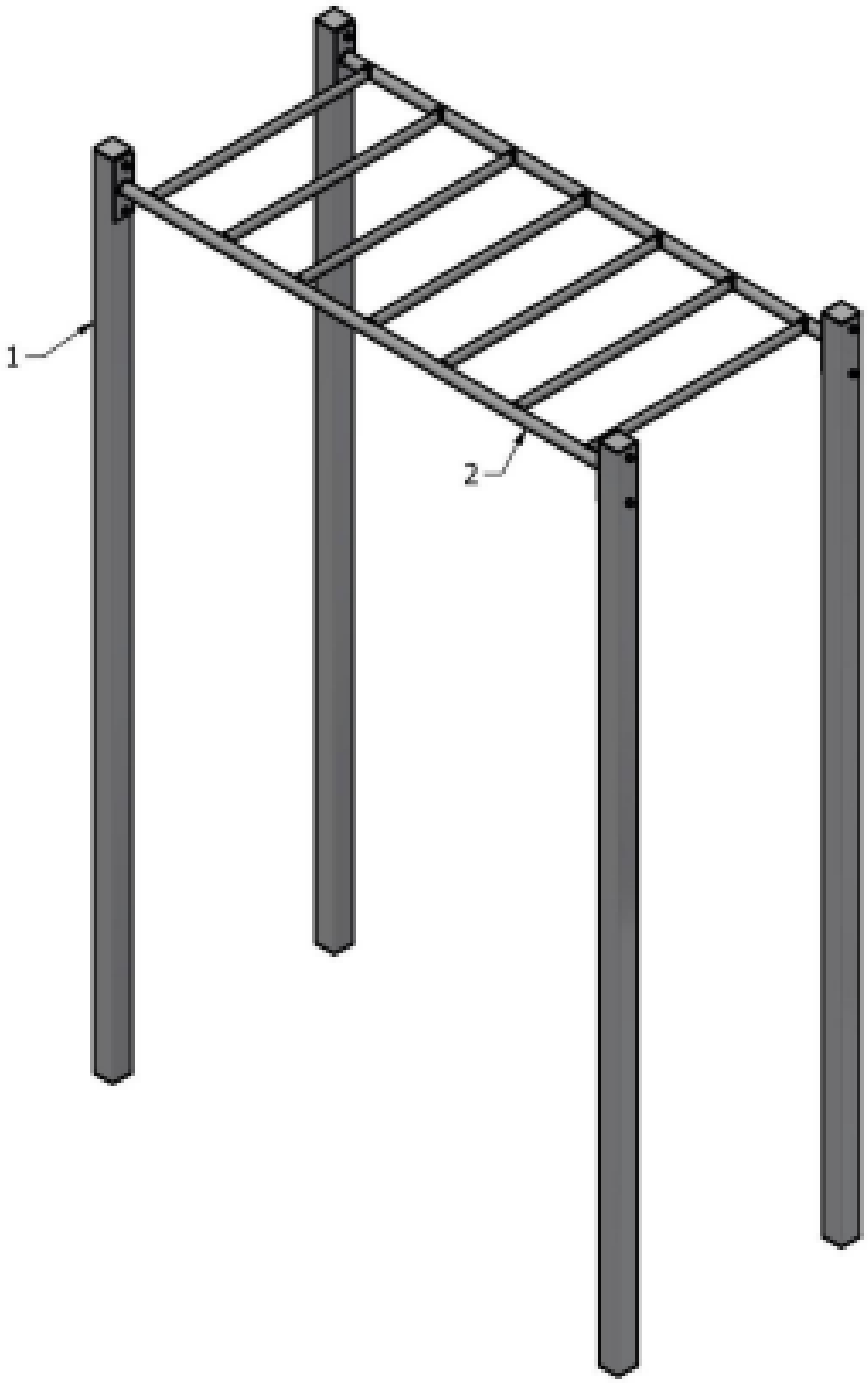
1
2

ELEMENTS	
H=3300 4 pcs.	L=2000 1 pc.
	

Heights

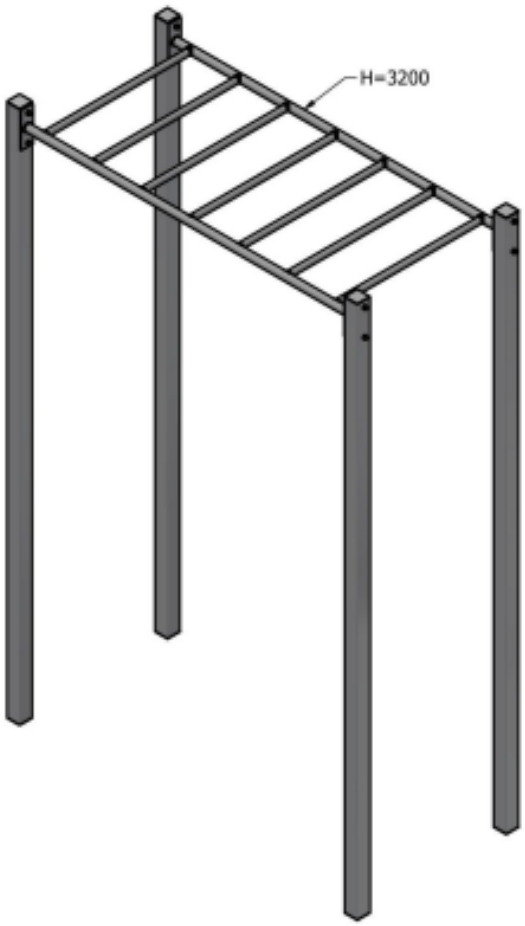

Mounting method
Mounting I (M12x110)

1. Plastic cap M12
2. Hex bolt M12x110
3. Washer M12
4. Rubber washer
5. Self-locking nut M12
6. Post (Profile 80x80)
7. Screw-on element

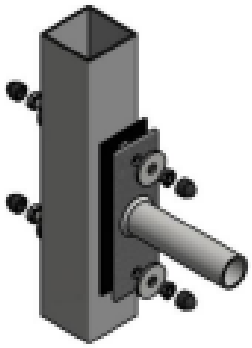

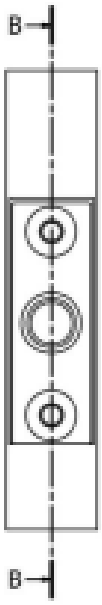

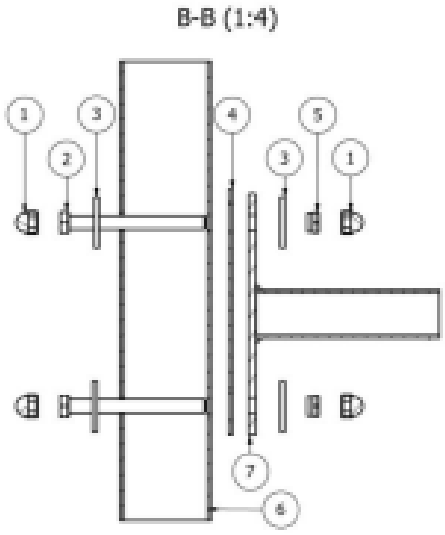

Foundations and foundation depth

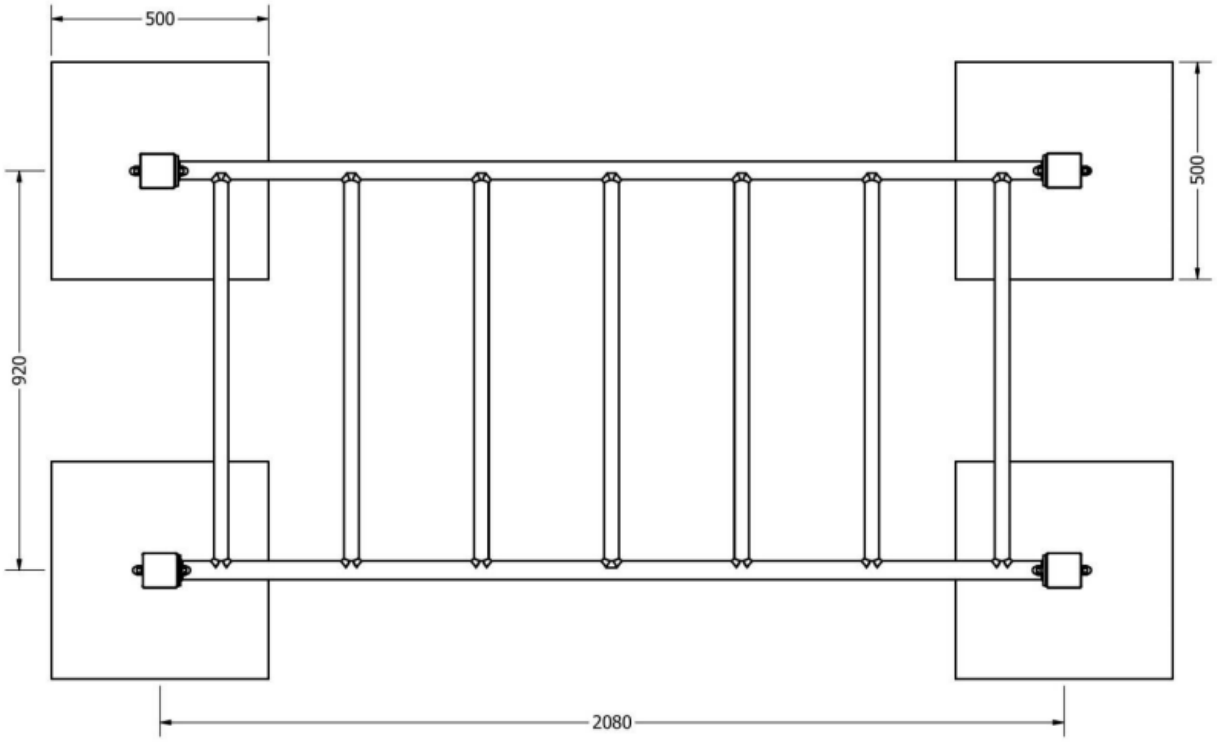

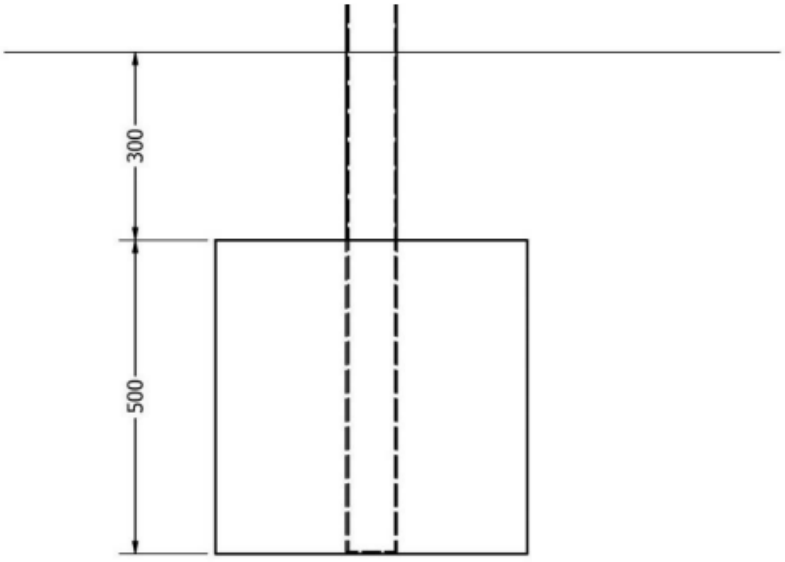

Safety zone

