# INSTALLATION GUIDE

# STREET WORKOUT 2

## Code: KS-SW-20



**Inter-Play**
PHONE: +48 91 506 50 41, EXPORT@INTER-PLAY.EU, WWW.INTER-PLAY.EU

**v.1-22.03.2024**

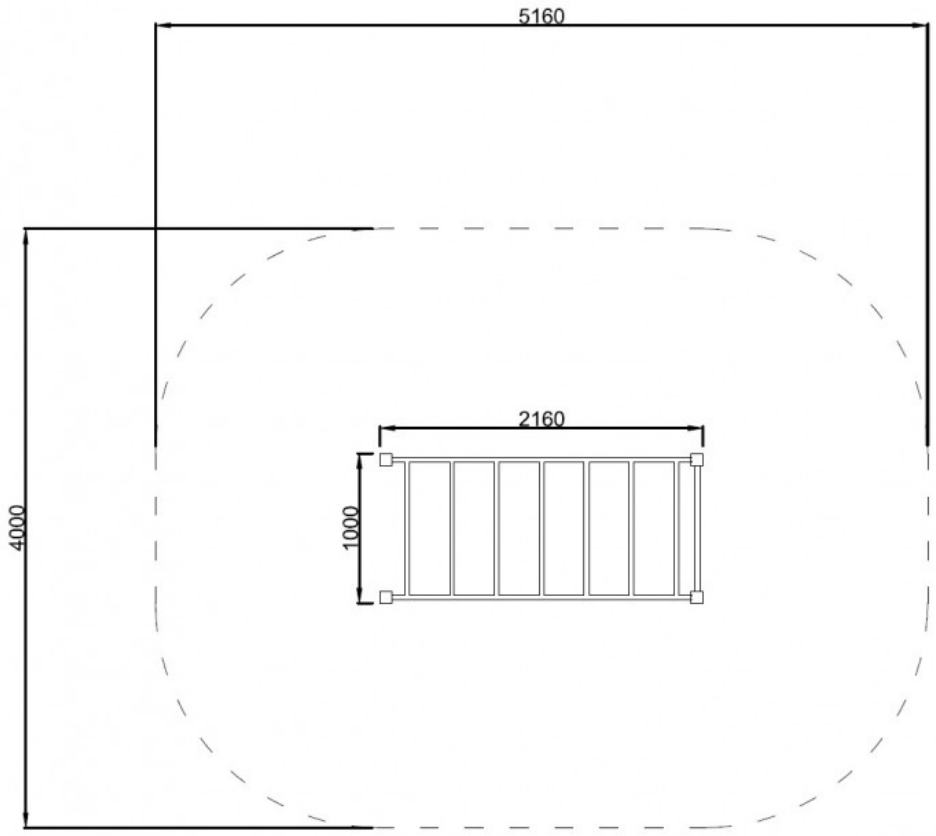
5160
4000
2160
1000

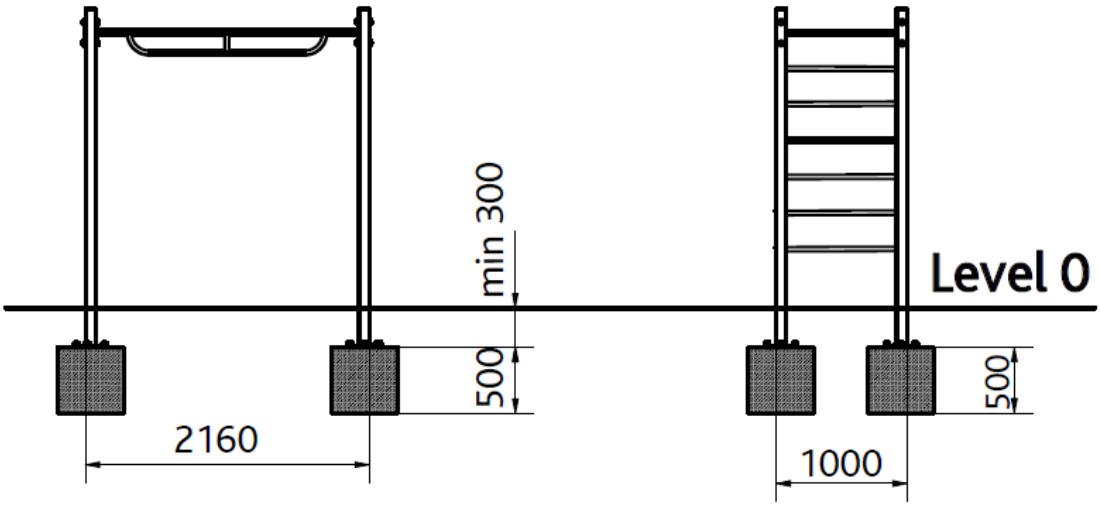


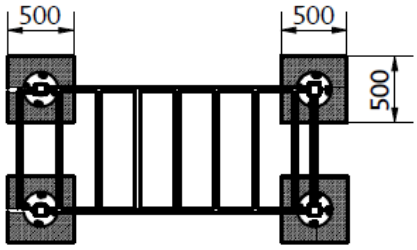




HIC 1,40 m